Drawing Number

Kabebari batten detail

Profile: Square 20x20mm

Base: 0.066kg/m
Cover: 0.066kg/m
Total: 0.132kg/m
Batten thickness: 1.2mm
End cap thickness: 2.2mm

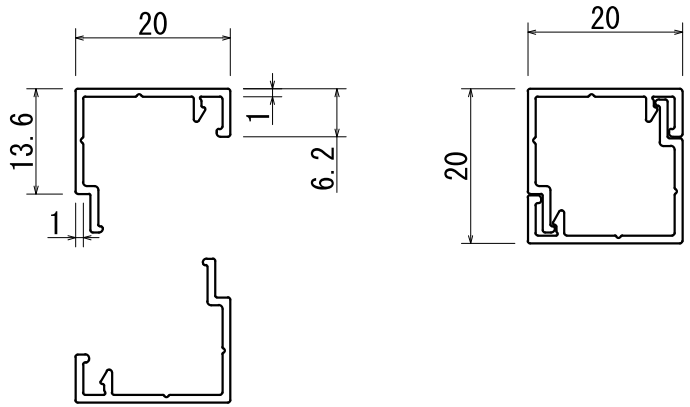

Installation detail 2

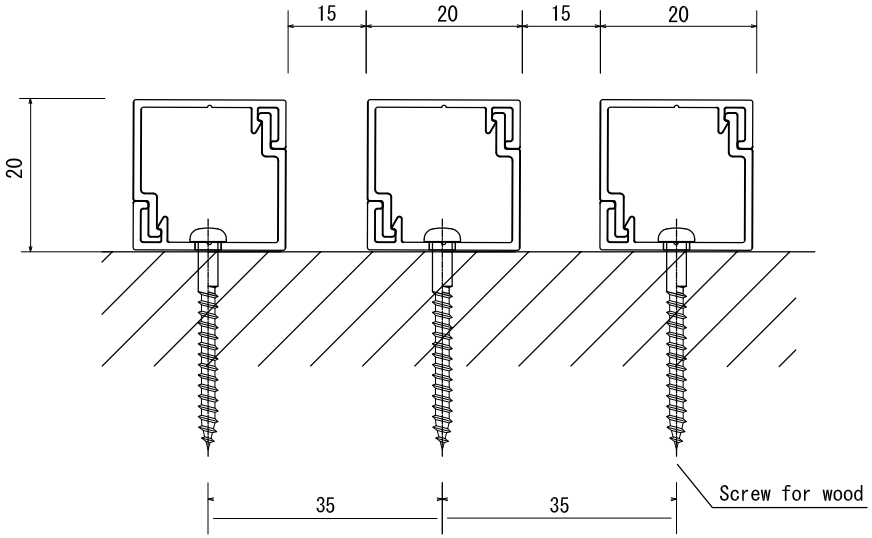

Endcap detail

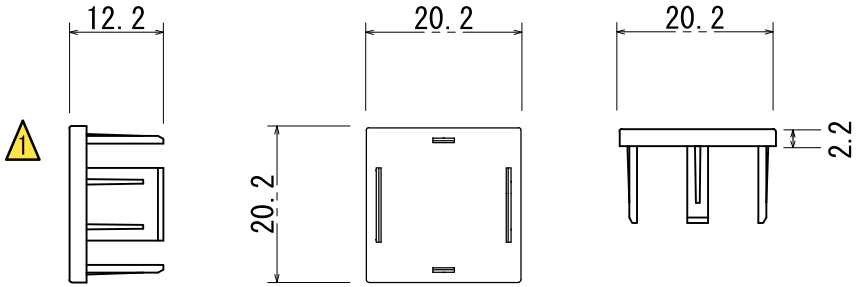

3			Product Name				Project Name	Creation Date	Page	Scale	Projection
2	Install	Never strike extrusion directly with a hammer or rubber mallet. Use a pine plank between the tool and the extrusion to avoid surface damage or denting.	Ever Art Wood - Kabebari				Kabebari 20x20		1 of 28	1:1	
1	End caps	Secure to batten with screw or exterior grade adhesive (Sikaflex), OR Screw fix or apply exterior grade adhesive (Sikaflex) to secure cap to batten.	Approval	Chek	Drawing	Design	Customer	Distributor		Manufacturer	
No.	DATE							covet		Takasho	

Drawing Number

Kabebari batten detail

Profile: Square 30x30mm

Base: 0.348kg/m
Cover: 0.347kg/m
Total: 0.695kg/m
Batten thickness: 1.2mm
End cap thickness: 3.0mm

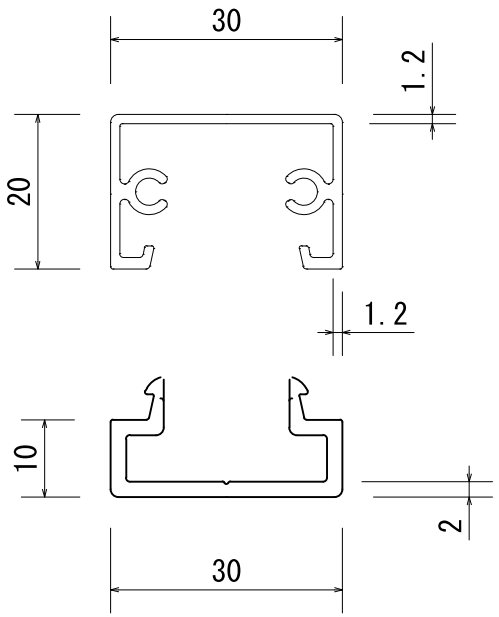

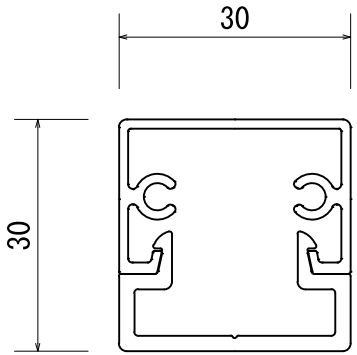

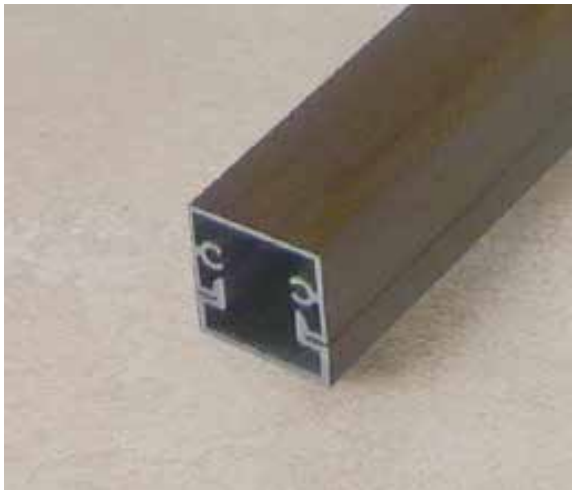

Endcap detail

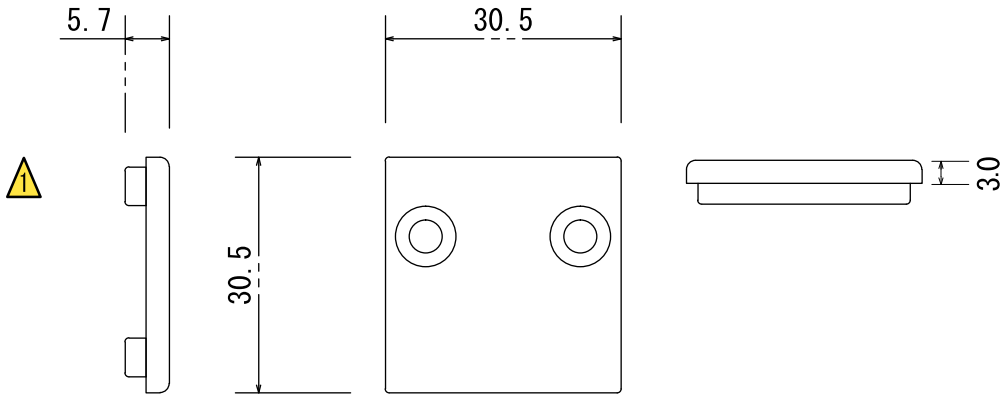

Installation detail 2

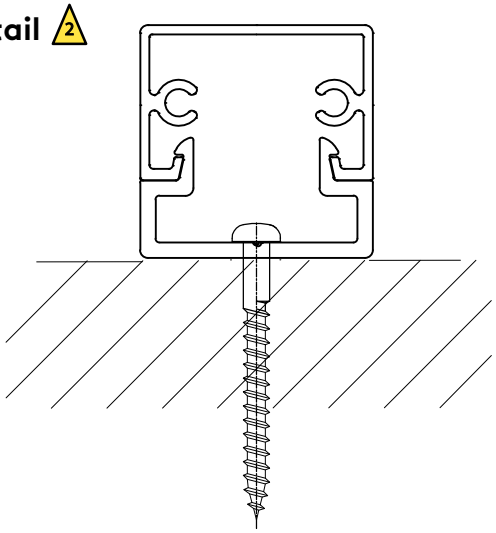

3			Product Name				Project Name	Creation Date	Page	Scale	Projection
2	Install	Never strike extrusion directly with a hammer or rubber mallet. Use a pine plank between the tool and the extrusion to avoid surface damage or denting.	Ever Art Wood - Kabebari				Square 30x30		2 of 28	1:1	
1	End caps	Secure to batten with screw or exterior grade adhesive (Sikaflex), OR Screw fix or apply exterior grade adhesive (Sikaflex) to secure cap to batten.	Approval	Chek	Drawing	Design	Customer	Distributor		Manufacturer	
No.	DATE							covet		Takasho	

Drawing Number

Kabebari batten detail

Profile: Square 40x40

Base: 0.489kg/m
Cover: 0.207kg/m
Total: 0.696kg/m
Batten thickness: 1.2mm
End cap thickness: 2.0mm

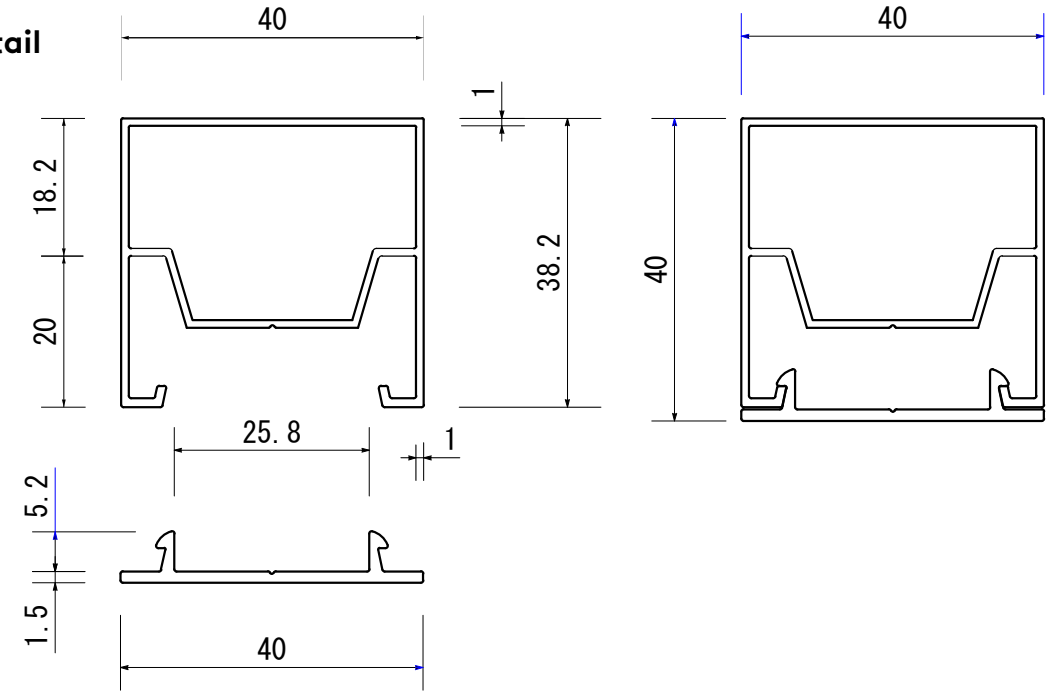

Endcap detail

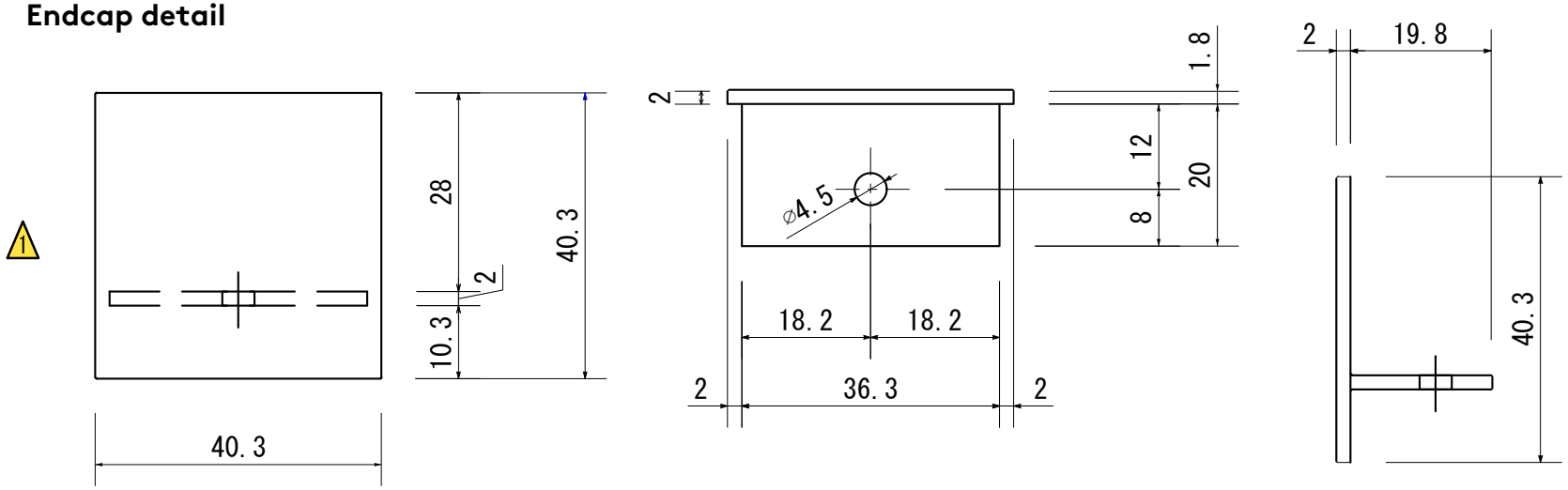

3			Product Name				Project Name	Creation Date	Page	Scale	Projection
2	Install	Never strike extrusion directly with a hammer or rubber mallet. Use a pine plank between the tool and the extrusion to avoid surface damage or denting.	Ever Art Wood - Kabebari				Square 40x40		3 of 28	1:1	
1	End caps	Secure to batten with screw or exterior grade adhesive (Sikaflex), OR Screw fix or apply exterior grade adhesive (Sikaflex) to secure cap to batten.	Approval	Chek	Drawing	Design	Customer	Distributor		Manufacturer	
No.	DATE							covet		Takasho	

Drawing Number

Kabebari batten detail

Profile: Square 40x40

Installation detail

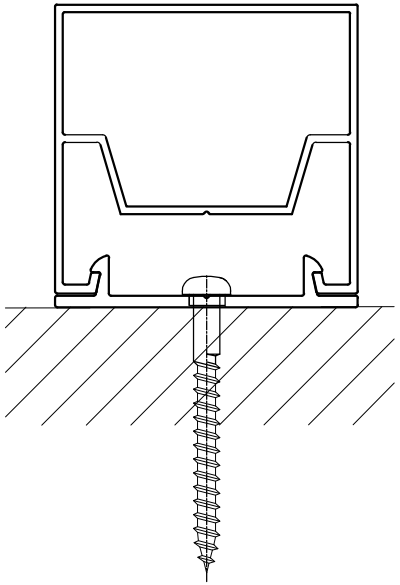

Installation detail - Endcap

2

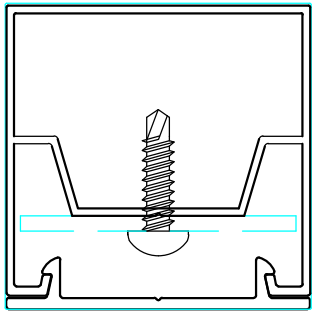

3		
2	Install	Never strike extrusion directly with a hammer or rubber mallet. Use a pine plank between the tool and the extrusion to avoid surface damage or denting.
1	End caps	Secure to batten with screw or exterior grade adhesive (Sikaflex), OR Screw fix or apply exterior grade adhesive (Sikaflex) to secure cap to batten.
No.	DATE	

Product Name	Project Name	Creation Date	Page	Scale	Projection
Ever Art Wood - Kabebari	Square 40x40		4 of 28	1:1	

Approval	Chek	Drawing	Design	Customer	Distributor	Manufacturer
					covet	Takasho

Drawing Number

Kabebari batten detail

Profile: Square 50x50

Base: 0.547kg/m
Cover: 0.853kg/m
Total: 1.400kg/m
Batten thickness: 1.5mm
End cap thickness: 2.0mm

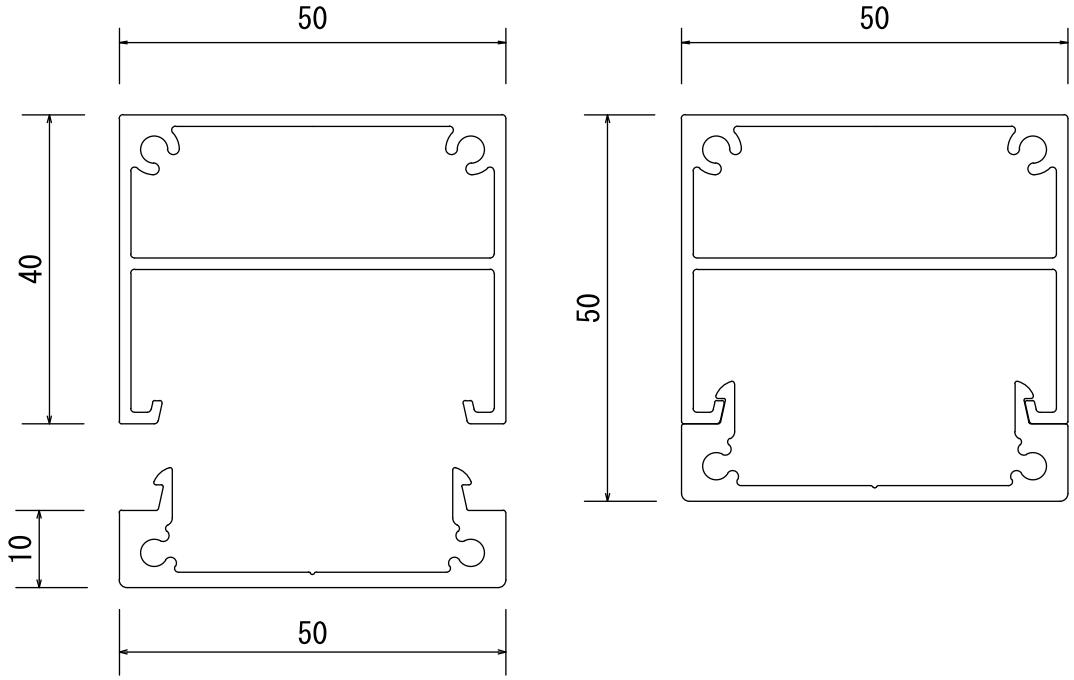

Endcap detail

1

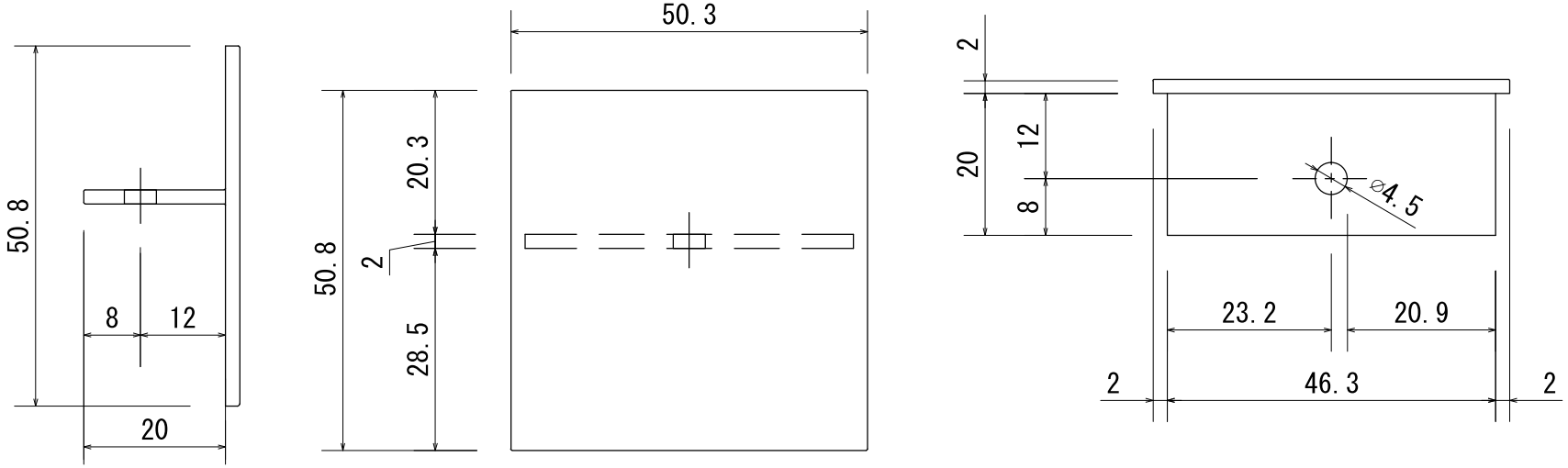

3			Product Name				Project Name	Creation Date	Page	Scale	Projection
2	Install	Never strike extrusion directly with a hammer or rubber mallet. Use a pine plank between the tool and the extrusion to avoid surface damage or denting.	Ever Art Wood - Kabebari				Square 50x50		5 of 28	1:1	
1	End caps	Secure to batten with screw or exterior grade adhesive (Sikaflex), OR Screw fix or apply exterior grade adhesive (Sikaflex) to secure cap to batten.	Approval	Chek	Drawing	Design	Customer	Distributor		Manufacturer	
No.	DATE							covet		Takasho	

Drawing Number

Kabebari batten detail

Profile: Square 50x50

Installation detail 2

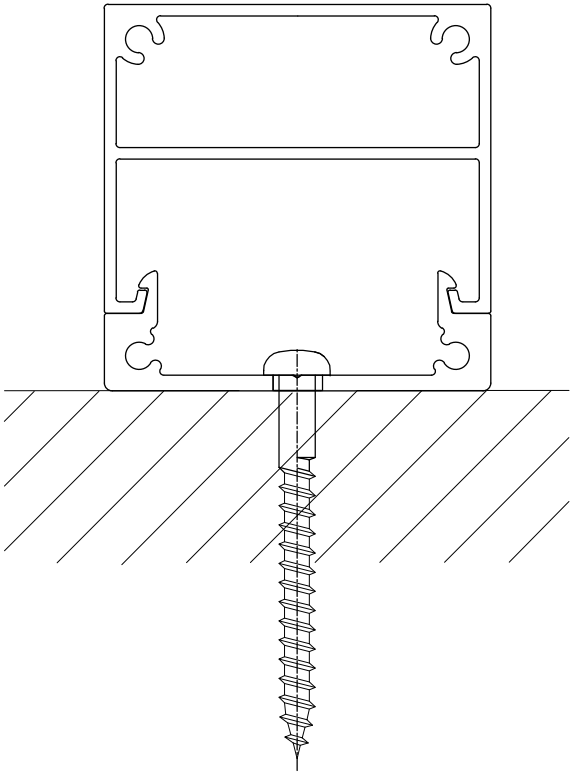

Kabebari Batten Installation Guide

- Aluminium can be damaged if mishandled. Never strike directly with a hammer or rubber mallet. Use a pine plank between the striking rubber mallet and the extrusion to avoid surface damage or denting.
- Cut aluminium with a drop saw using an aluminium blade.
- Always cap ends of extrusions with supplied end caps or a flashing to avoid moisture ingress.
- Plastic end caps must be securely inserted with screws supplied or sikafelx applied to the inside of the extrusion before inserting. This will prevent slippage of the extrusion.
- Metal end caps (painted) must be screwed to the extrusion.
- All end caps can only be applied to straight 90 degree cuts. They cannot be applied to angle end cuts.
- Ensure appropriate screws are used to suit the substrate you are fastening to. It is important to use stainless steel or bi-metal screws for all metal surfaces impacted when fastening (i.e. furring channels, top hats, steel frames). This will prevent galvanic reaction between the screw/substrate and aluminium extrusion.
- Fasten at maximum 1 metre spans. Please contact Covet for further information.
- Always fasten the male (base) section first. The female (top section) clips over the top. They can also slide on if necessary.

3			Product Name				Project Name	Creation Date	Page	Scale	Projection
2	Install	Never strike extrusion directly with a hammer or rubber mallet. Use a pine plank between the tool and the extrusion to avoid surface damage or denting.	Ever Art Wood - Kabebari				Square 50x50		6 of 28	1:1	
1	End caps	Secure to batten with screw or exterior grade adhesive (Sikaflex), OR Screw fix or apply exterior grade adhesive (Sikaflex) to secure cap to batten.	Approval	Chek	Drawing	Design	Customer	Distributor		Manufacturer	
No.	DATE							covet		Takasho	

Drawing Number

Kabebari batten detail

Profile: Kogarana 24x27mm

Base: 0.099kg/m
Cover: 0.224kg/m
Total: 0.323kg/m
Batten thickness: 0.9mm
End cap thickness: 2.3mm

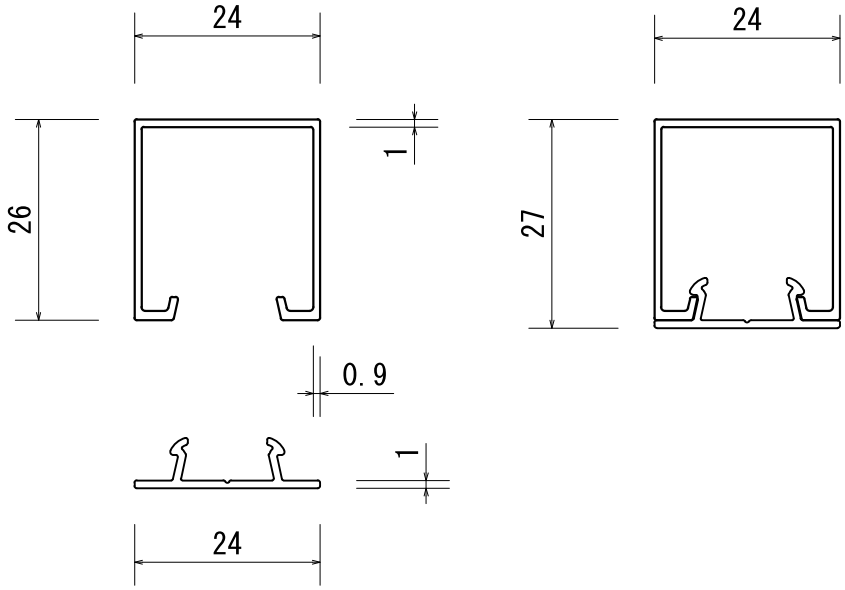

Endcap detail

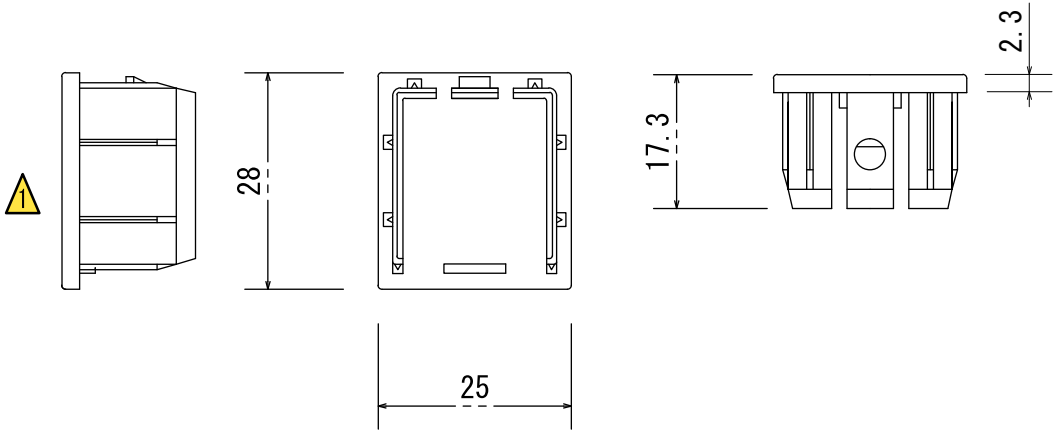

Installation detail 2

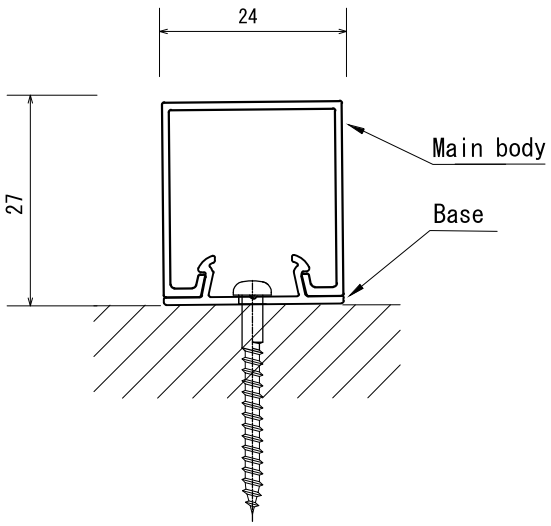

3			Product Name				Project Name	Creation Date	Page	Scale	Projection
2	Install	Never strike extrusion directly with a hammer or rubber mallet. Use a pine plank between the tool and the extrusion to avoid surface damage or denting.	Ever Art Wood - Kabebari				Kogarana 24x27		7 of 28	1:1	
1	End caps	Secure to batten with screw or exterior grade adhesive (Sikaflex), OR Screw fix or apply exterior grade adhesive (Sikaflex) to secure cap to batten.	Approval	Chek	Drawing	Design	Customer	Distributor		Manufacturer	
No.	DATE							covet		Takasho	

Drawing Number

Kabebari batten detail

Profile: Rectangle 40x20

Base: 0.403kg/m
Cover: 0.231kg/m
Total: 0.634kg/m
Batten thickness: 1.0mm
End cap thickness: 1.0mm

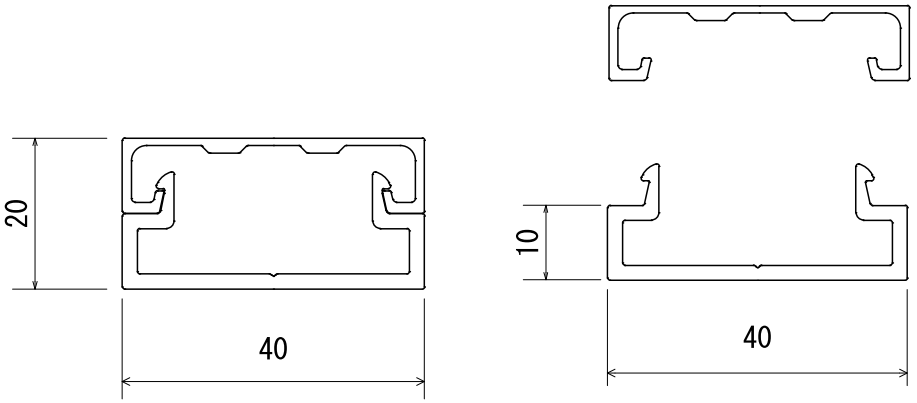

Endcap detail

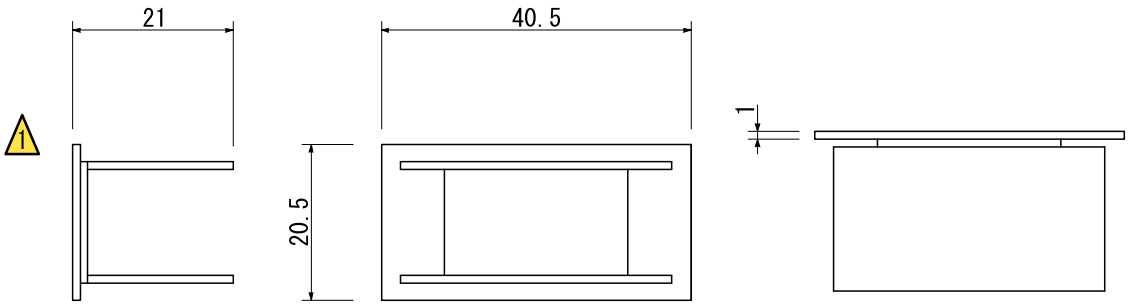

Installation detail 2

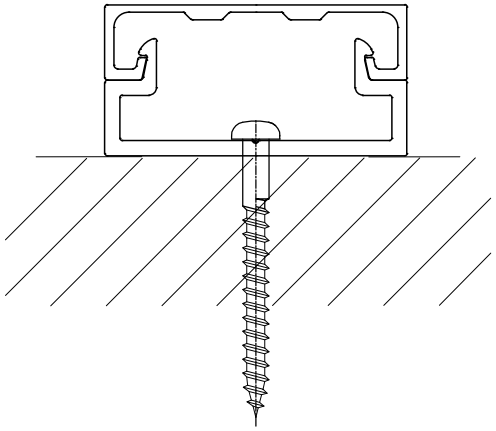

3		
2	Install	Never strike extrusion directly with a hammer or rubber mallet. Use a pine plank between the tool and the extrusion to avoid surface damage or denting.
1	End caps	Secure to batten with screw or exterior grade adhesive (Sikaflex), OR Screw fix or apply exterior grade adhesive (Sikaflex) to secure cap to batten.
No.	DATE	

Product Name	Project Name	Creation Date	Page	Scale	Projection
Ever Art Wood - Kabebari	Rectangle 40x20		8 of 28	1:1	

Approval	Chek	Drawing	Design	Customer	Distributor	Manufacturer
					covet	Takasho

Drawing Number

Kabebari batten detail

Profile: Rectangle 30x50mm

Base: 0.348kg/m
Cover: 0.390kg/m
Total: 0.738kg/m
Batten thickness: 1.2mm
End cap thickness: 3.0mm

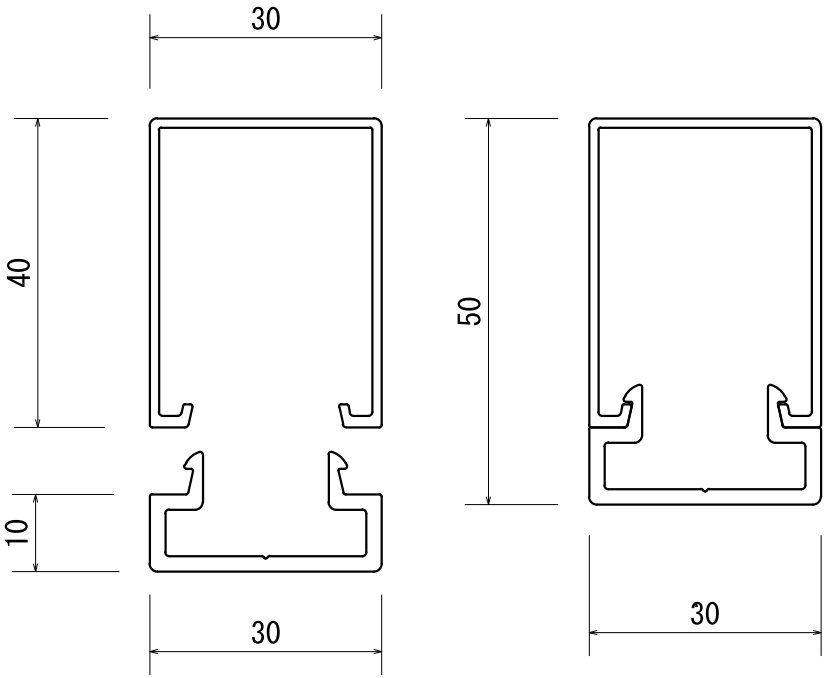

Endcap detail

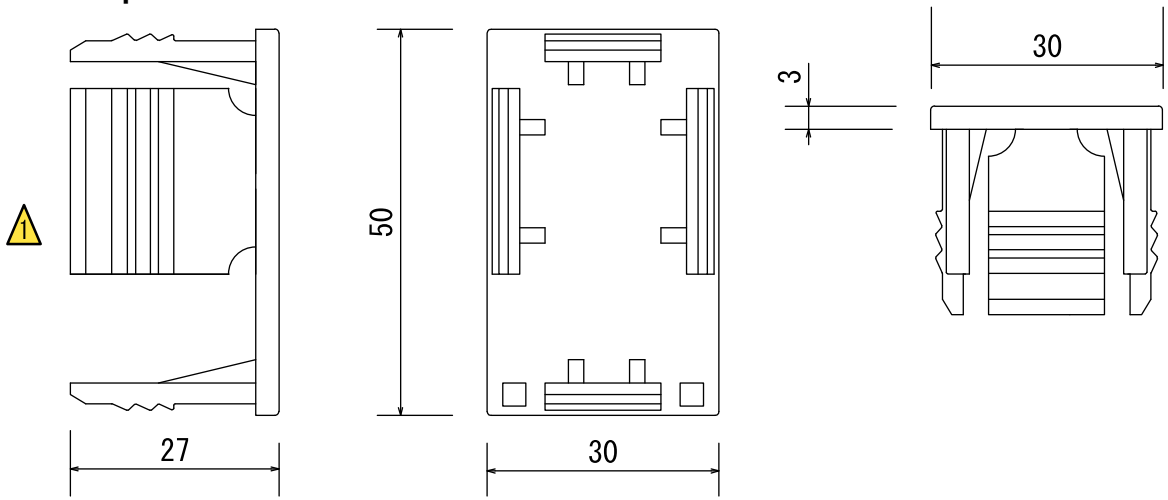

3			Product Name			Project Name	Creation Date	Page	Scale	Projection
2	Install	Never strike extrusion directly with a hammer or rubber mallet. Use a pine plank between the tool and the extrusion to avoid surface damage or denting.	Ever Art Wood - Kabebari			Rectangle 30x50		9 of 28	1:1	
1	End caps	Secure to batten with screw or exterior grade adhesive (Sikaflex), OR Screw fix or apply exterior grade adhesive (Sikaflex) to secure cap to batten.	Approval	Chek	Drawing	Design	Customer	Distributor	Manufacturer	
No.	DATE							covet	Takasho	

Drawing Number

Installation detail 2

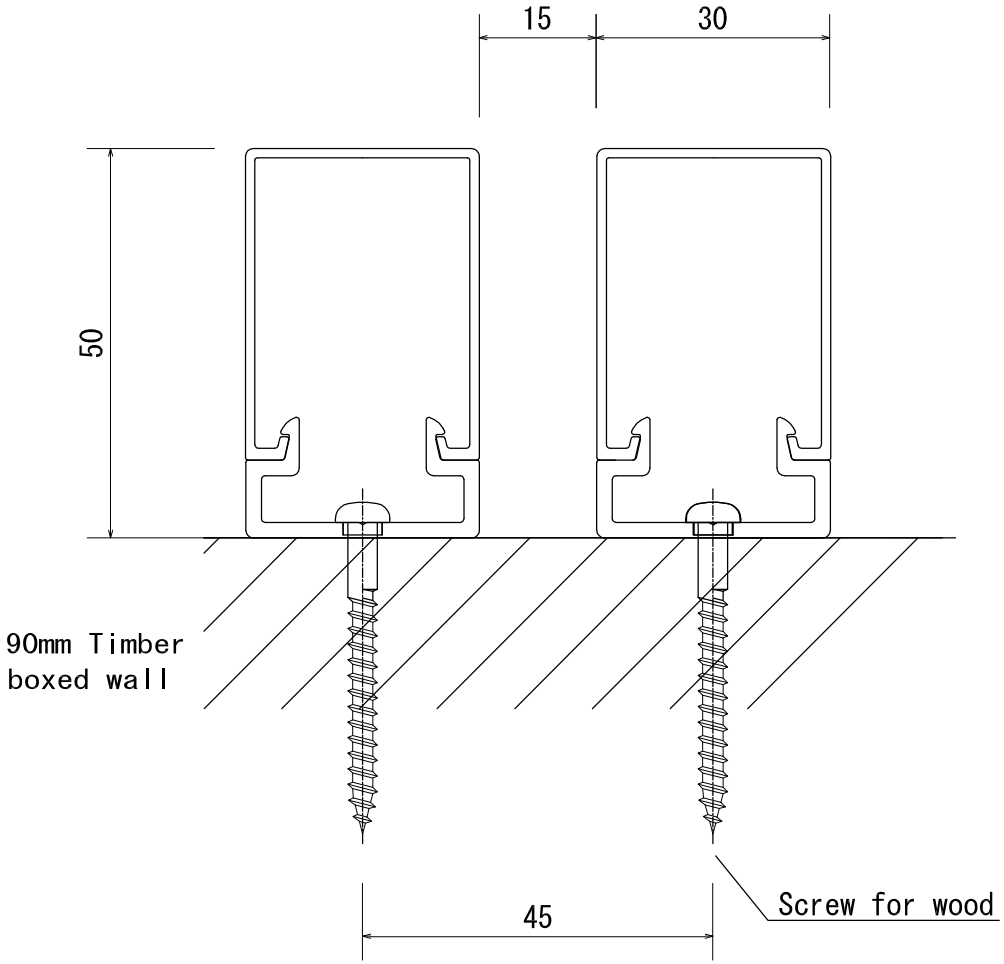

3		
2	Install	Never strike extrusion directly with a hammer or rubber mallet. Use a pine plank between the tool and the extrusion to avoid surface damage or denting.
1	End caps	Secure to batten with screw or exterior grade adhesive (Sikaflex), OR Screw fix or apply exterior grade adhesive (Sikaflex) to secure cap to batten.
No.	DATE	

Product Name	Project Name	Creation Date	Page	Scale	Projection
Ever Art Wood - Kabebari	Rectangle 30x50		10 of 28	1:1	

Approval	Chek	Drawing	Design	Customer	Distributor	Manufacturer
					covet	Takasho

Drawing Number

Kabebari batten detail

Profile: Rectangle 30x85

Base: 0.348kg/m
Cover: 0.712kg/m
Total: 1.060kg/m
Batten thickness: 1.2mm
End cap thickness: 3.0mm

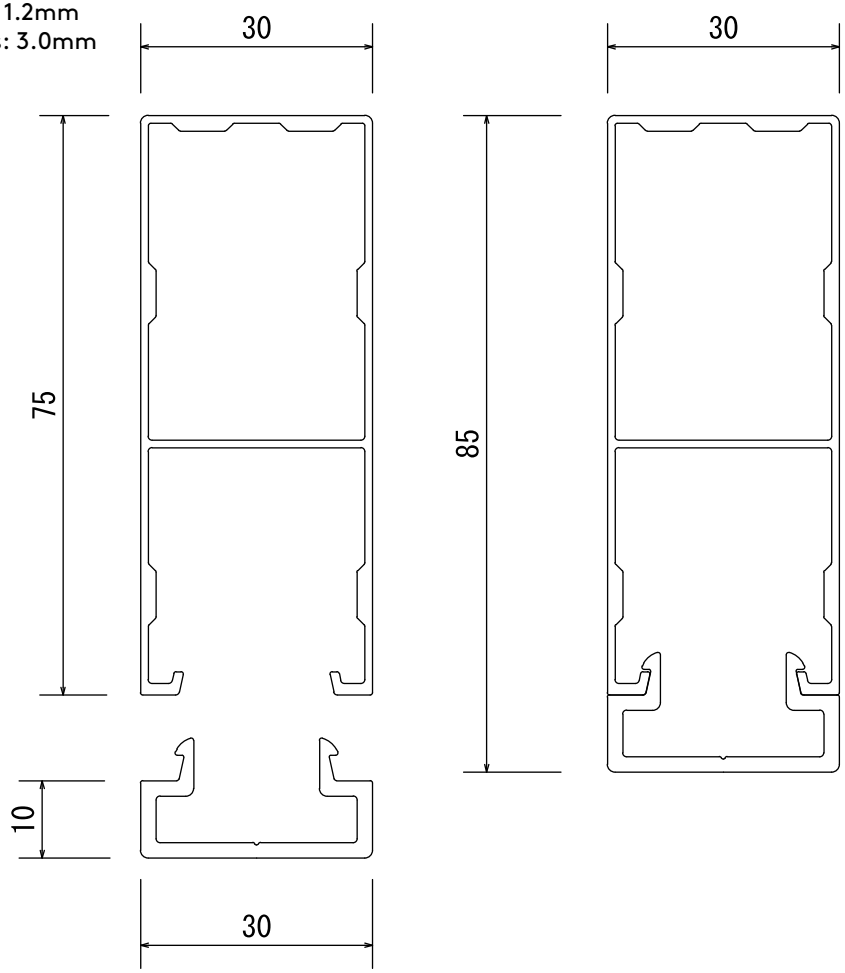

Endcap detail 1

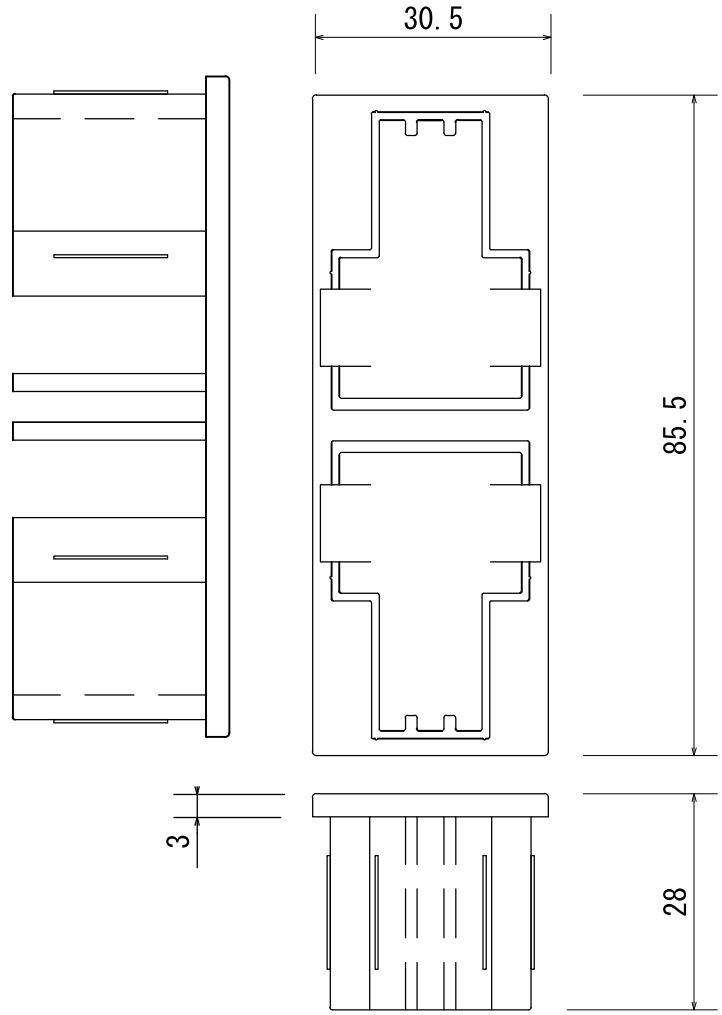

3			Product Name				Project Name	Creation Date	Page	Scale	Projection
2	Install	Never strike extrusion directly with a hammer or rubber mallet. Use a pine plank between the tool and the extrusion to avoid surface damage or denting.	Ever Art Wood - Kabebari				Rectangle 30x85		11 of 28	1:1	
1	End caps	Secure to batten with screw or exterior grade adhesive (Sikaflex), OR Screw fix or apply exterior grade adhesive (Sikaflex) to secure cap to batten.	Approval	Chek	Drawing	Design	Customer	Distributor		Manufacturer	
No.	DATE							covet		Takasho	

Drawing Number

Installation detail 2

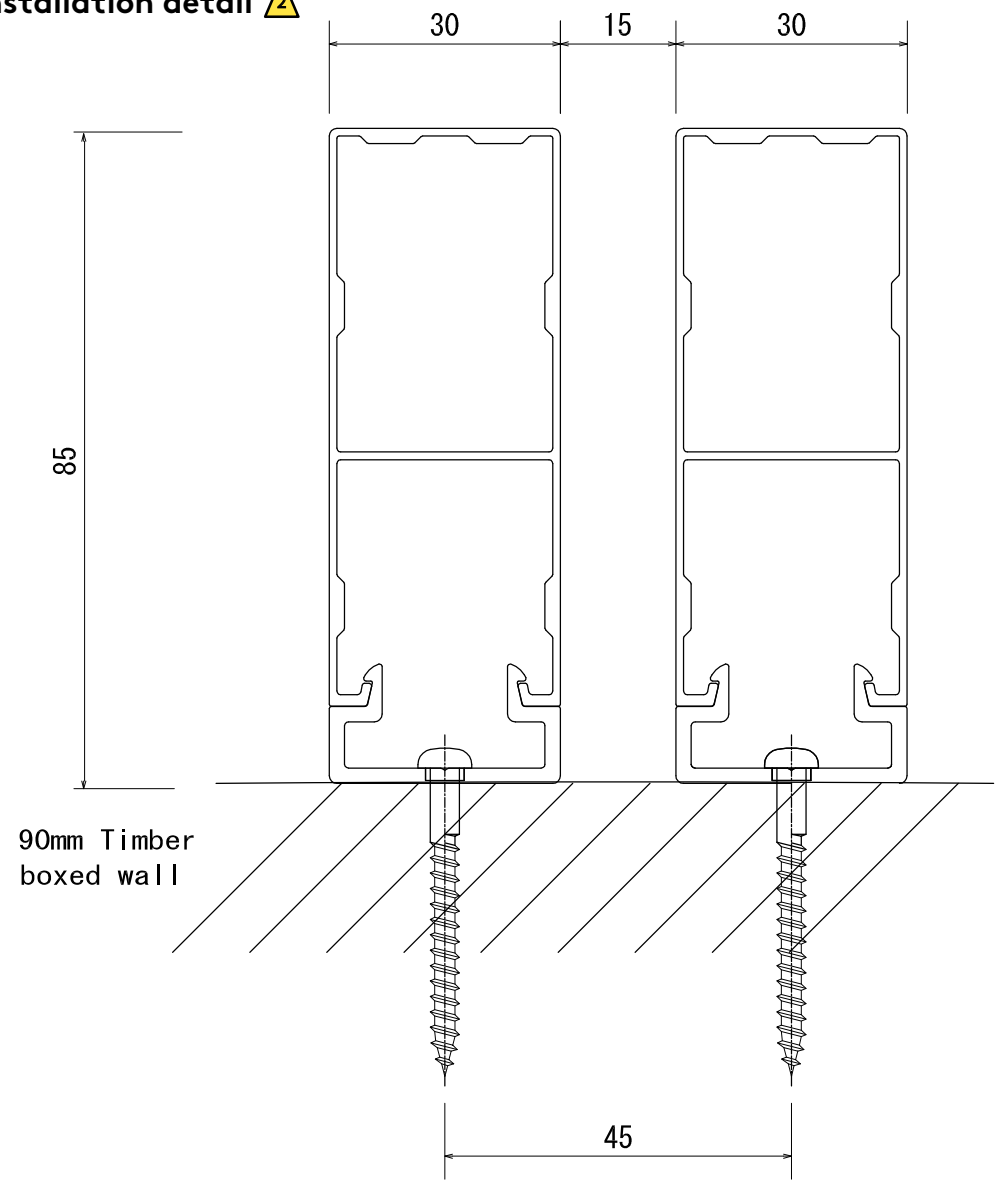

3		
2	Install	Never strike extrusion directly with a hammer or rubber mallet. Use a pine plank between the tool and the extrusion to avoid surface damage or denting.
1	End caps	Secure to batten with screw or exterior grade adhesive (Sikaflex), OR Screw fix or apply exterior grade adhesive (Sikaflex) to secure cap to batten.
No.	DATE	

Product Name	Project Name	Creation Date	Page	Scale	Projection
Ever Art Wood - Kabebari	Rectangle 30x85		12 of 28	1:1	

Approval	Chek	Drawing	Design	Customer	Distributor	Manufacturer
					covet	Takasho

Drawing Number

Kabebari batten detail

Profile: Rectangle 50x100mm

Base: 0.547kg/m
Cover: 1.258kg/m
Total: 1.805kg/m
Batten thickness: 1.5mm
End cap thickness: 2.0mm

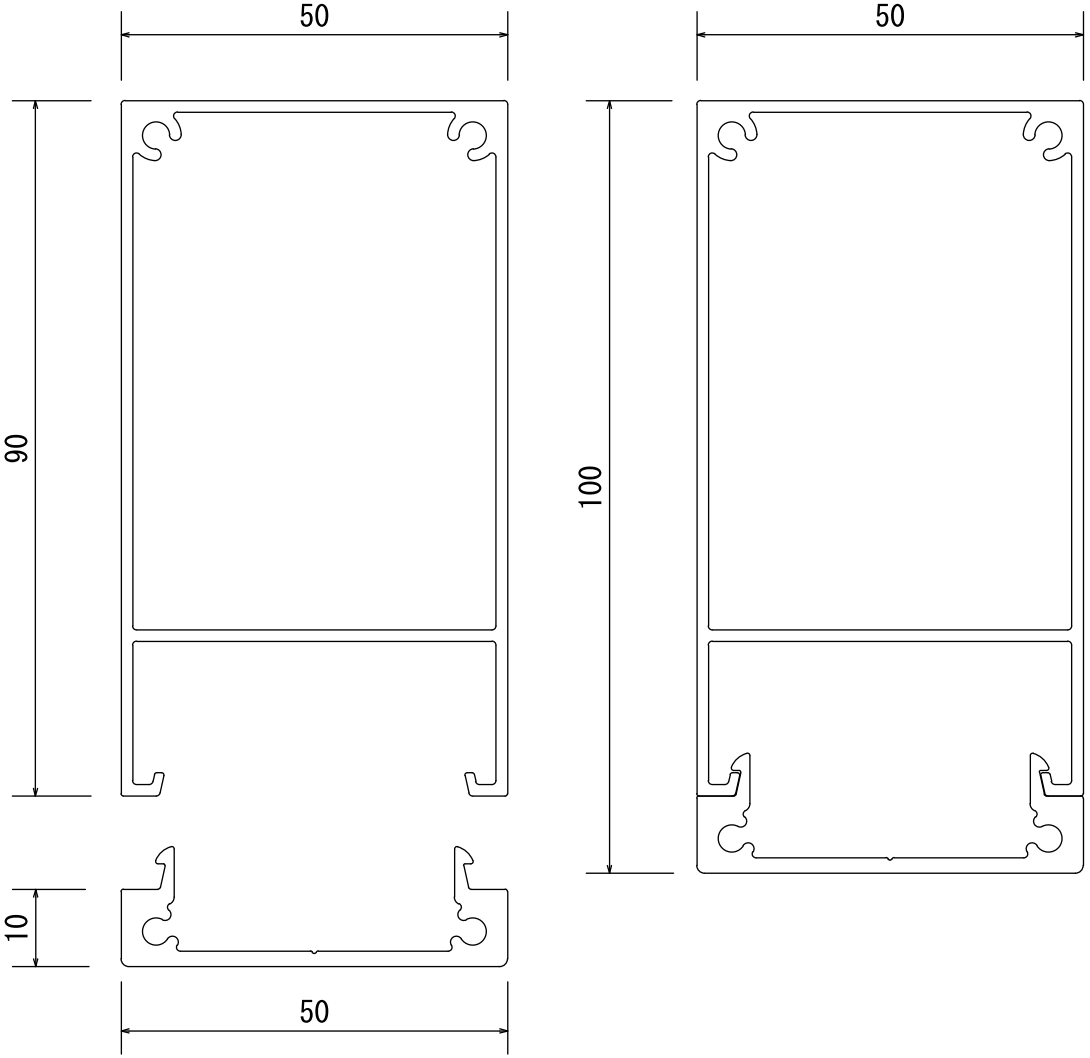

3			Product Name				Project Name	Creation Date	Page	Scale	Projection
2	Install	Never strike extrusion directly with a hammer or rubber mallet. Use a pine plank between the tool and the extrusion to avoid surface damage or denting.	Ever Art Wood - Kabebari				Rectangle 50x100		13 of 28	1:1	
1	End caps	Secure to batten with screw or exterior grade adhesive (Sikaflex), OR Screw fix or apply exterior grade adhesive (Sikaflex) to secure cap to batten.	Approval	Chek	Drawing	Design	Customer	Distributor		Manufacturer	
No.	DATE							covet		Takasho	

Drawing Number

Kabebari batten detail

Profile: Rectangle 50x100mm

Endcap detail ⚠1

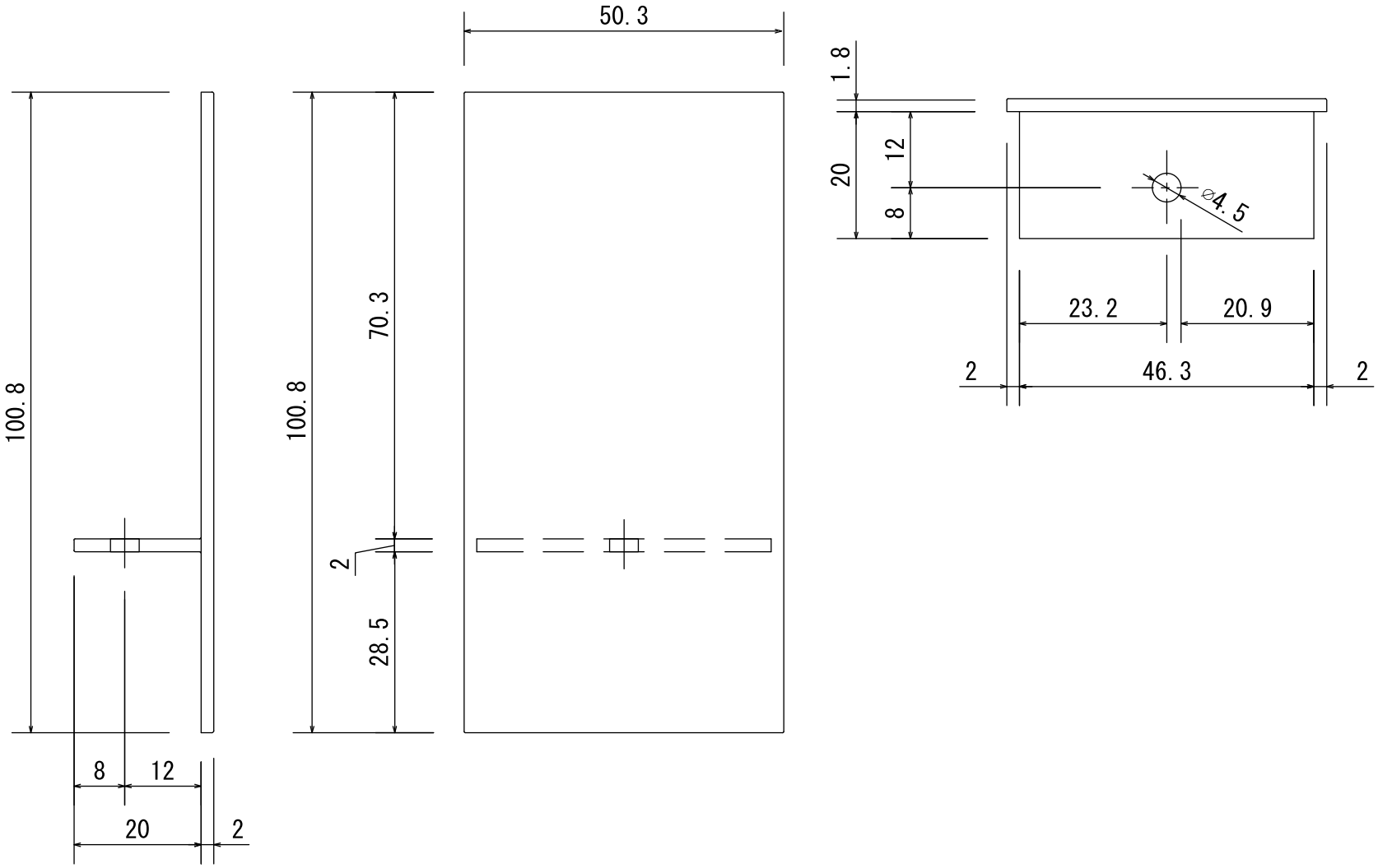

⚠3			Product Name				Project Name	Creation Date	Page	Scale	Projection
⚠2	Install	Never strike extrusion directly with a hammer or rubber mallet. Use a pine plank between the tool and the extrusion to avoid surface damage or denting.	Ever Art Wood - Kabebari				Rectangle 50x100		14 of 28	1:1	
⚠1	End caps	Secure to batten with screw or exterior grade adhesive (Sikaflex), OR Screw fix or apply exterior grade adhesive (Sikaflex) to secure cap to batten.	Approval	Chek	Drawing	Design	Customer	Distributor		Manufacturer	
No.	DATE							covet		Takasho	

Drawing Number

Kabebari batten detail

Profile: Rectangle 50x100mm

Installation detail 2

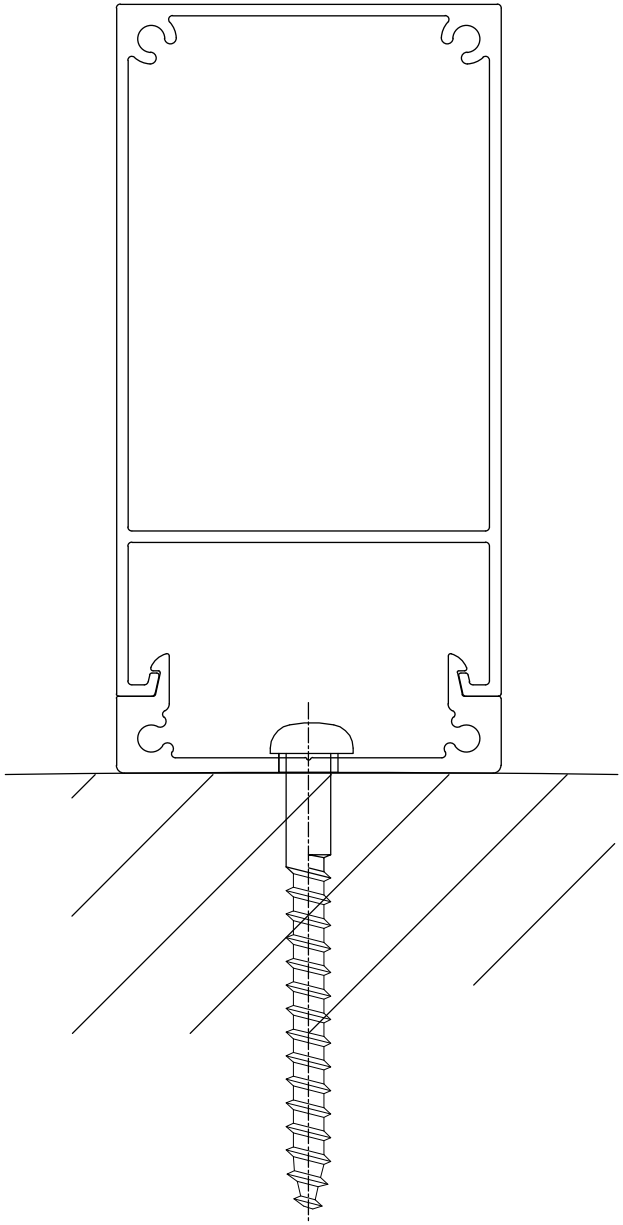

3		
2	Install	Never strike extrusion directly with a hammer or rubber mallet. Use a pine plank between the tool and the extrusion to avoid surface damage or denting.
1	End caps	Secure to batten with screw or exterior grade adhesive (Sikaflex), OR Screw fix or apply exterior grade adhesive (Sikaflex) to secure cap to batten.
No.	DATE	

Product Name	Project Name	Creation Date	Page	Scale	Projection
Ever Art Wood - Kabebari	Rectangle 50x100		15 of 28	1:1	

Approval	Chek	Drawing	Design	Customer	Distributor	Manufacturer
					covet	Takasho

Drawing Number

Kabebari batten detail

Profile: Oki 100x100mm

Base: 0.692kg/m
Cover: 1.342kg/m
Total: 2.034kg/m
Batten thickness: 1.2mm
End cap thickness: 3.0mm

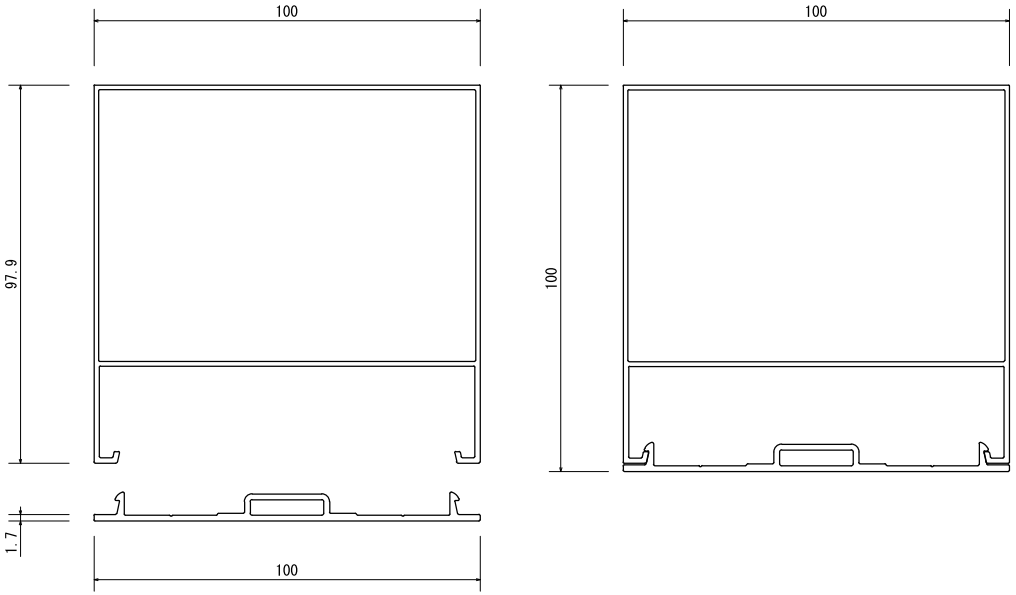

Endcap detail

1
3

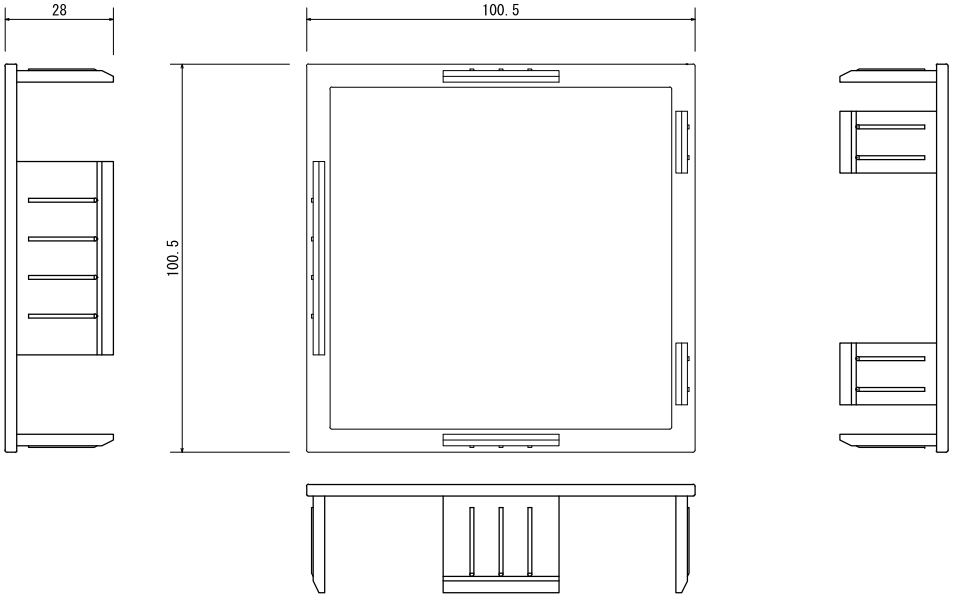

3

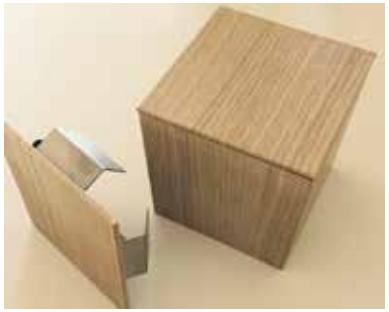

3	End caps	End caps available in plastic or aluminium.	Product Name				Project Name	Creation Date	Page	Scale	Projection
2	Install	Never strike extrusion directly with a hammer or rubber mallet. Use a pine plank between the tool and the extrusion to avoid surface damage or denting.	Ever Art Wood - Kabebari				Oki 100x100		16 of 28	1:2	
1	End caps	Secure to batten with screw or exterior grade adhesive (Sikaflex), OR Screw fix or apply exterior grade adhesive (Sikaflex) to secure cap to batten.	Approval	Chek	Drawing	Design	Customer	Distributor		Manufacturer	
No.	DATE							covet		Takasho	

Drawing Number

Kabebari batten detail

Profile: Oki 100x100mm

Installation detail 2

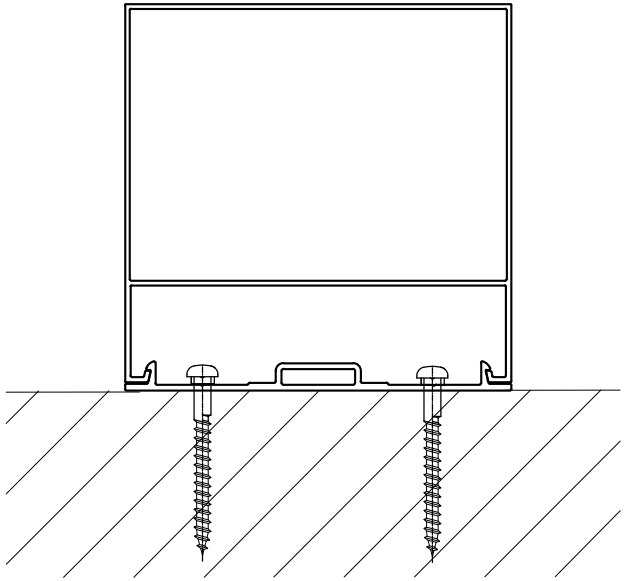

3	End caps	End caps available in plastic or aluminium.
2	Install	Never strike extrusion directly with a hammer or rubber mallet. Use a pine plank between the tool and the extrusion to avoid surface damage or denting.
1	End caps	Secure to batten with screw or exterior grade adhesive (Sikaflex), OR Screw fix or apply exterior grade adhesive (Sikaflex) to secure cap to batten.
No.	DATE	

Product Name	Project Name	Creation Date	Page	Scale	Projection
Ever Art Wood - Kabebari	Oki 100x100		17 of 28	1:2	

Approval	Chek	Drawing	Design	Customer	Distributor	Manufacturer
					covet	Takasho

Drawing Number

Kabebari batten detail

Profile: Slimline 30x13

Base: 0.108kg/m
Cover: 0.173kg/m
Total: 0.281kg/m
*End Cover: 0.209kg/m
Batten thickness: 1.0mm
End cap thickness: 2.5mm

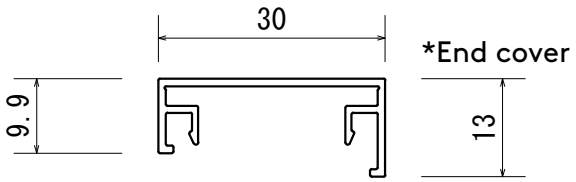

*End cover

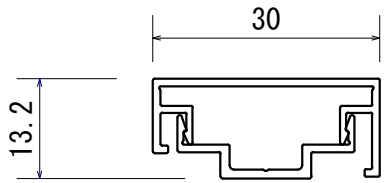

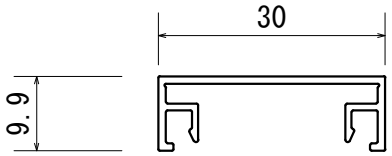

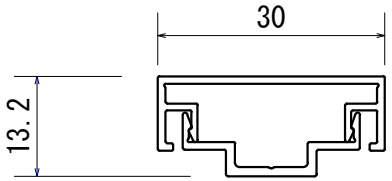

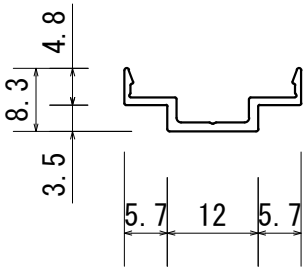

Endcap detail

1

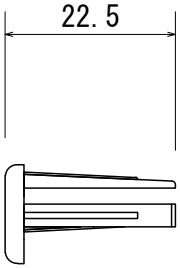

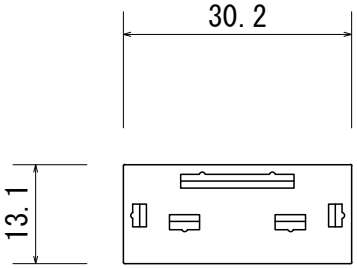

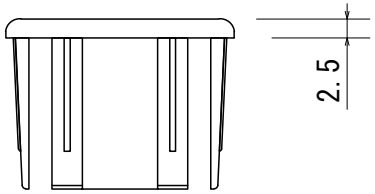

Installation detail 2

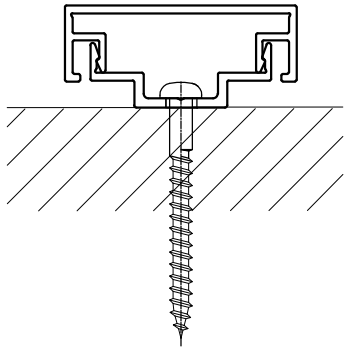

3			Product Name				Project Name	Creation Date	Page	Scale	Projection
2	Install	Never strike extrusion directly with a hammer or rubber mallet. Use a pine plank between the tool and the extrusion to avoid surface damage or denting.	Ever Art Wood - Kabebari				Slimline 30x13mm		18 of 28	1:1	
1	End caps	Secure to batten with screw or exterior grade adhesive (Sikaflex), OR Screw fix or apply exterior grade adhesive (Sikaflex) to secure cap to batten.	Approval	Chek	Drawing	Design	Customer	Distributor		Manufacturer	
No.	DATE							covet		Takasho	

Drawing Number

Kabebari batten detail

Profile: Slimline 30x18

Base: 0.108kg/m
Cover: 0.201kg/m
Total: 0.309kg/m
*End Cover: 0.209kg/m
Batten thickness: 1.0mm
End cap thickness: 2.5mm

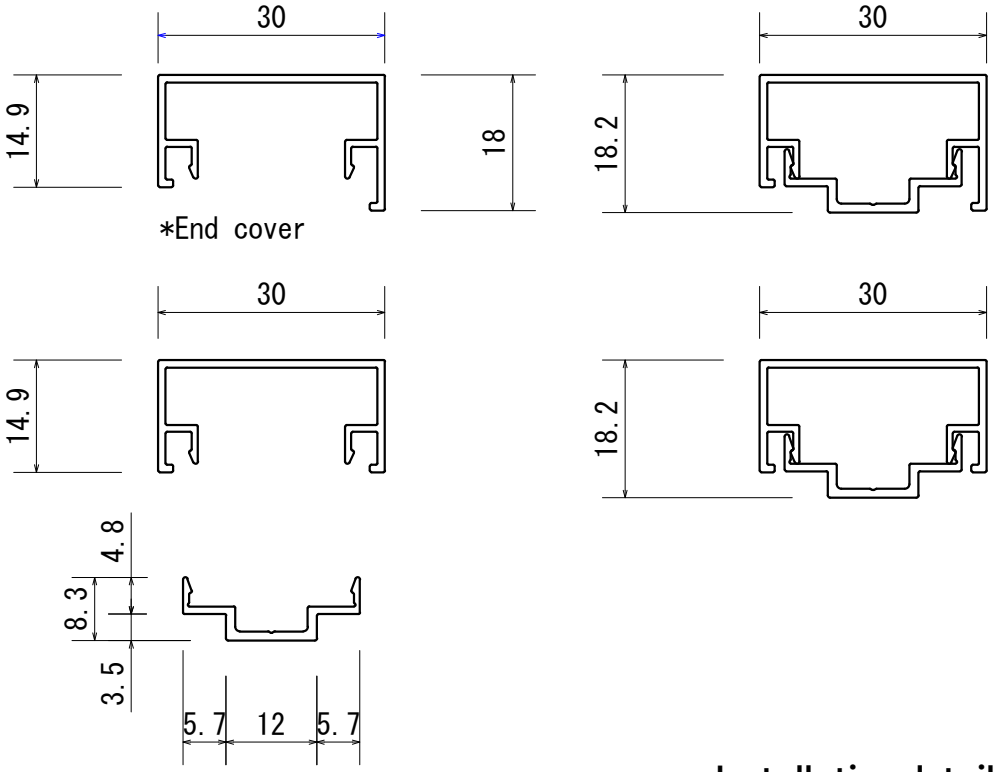

Endcap detail

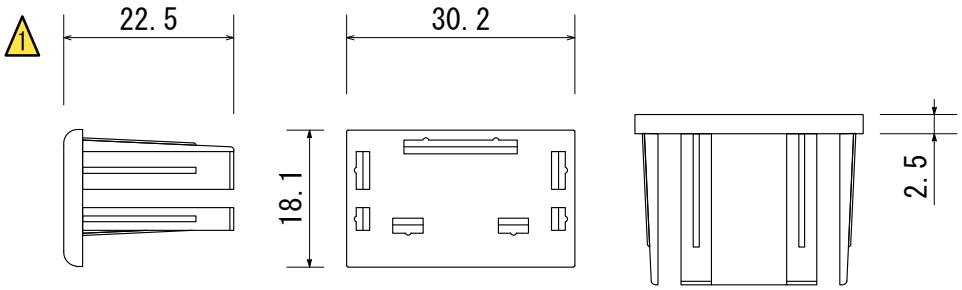

Installation detail 2

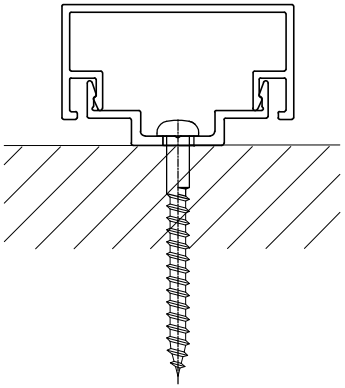

3			Product Name				Project Name	Creation Date	Page	Scale	Projection
2	Install	Never strike extrusion directly with a hammer or rubber mallet. Use a pine plank between the tool and the extrusion to avoid surface damage or denting.	Ever Art Wood - Kabebari				Slimline 30x18mm		19 of 28	1:1	
1	End caps	Secure to batten with screw or exterior grade adhesive (Sikaflex), OR Screw fix or apply exterior grade adhesive (Sikaflex) to secure cap to batten.	Approval	Chek	Drawing	Design	Customer	Distributor		Manufacturer	
No.	DATE							covet		Takasho	

Drawing Number

Kabebari batten detail

Profile: Plank 100x12mm

Base: 0.692kg/m
Cover: 0.417kg/m
Total: 1.109kg/m
Batten thickness: 1.0mm
End cap thickness: 2.0mm

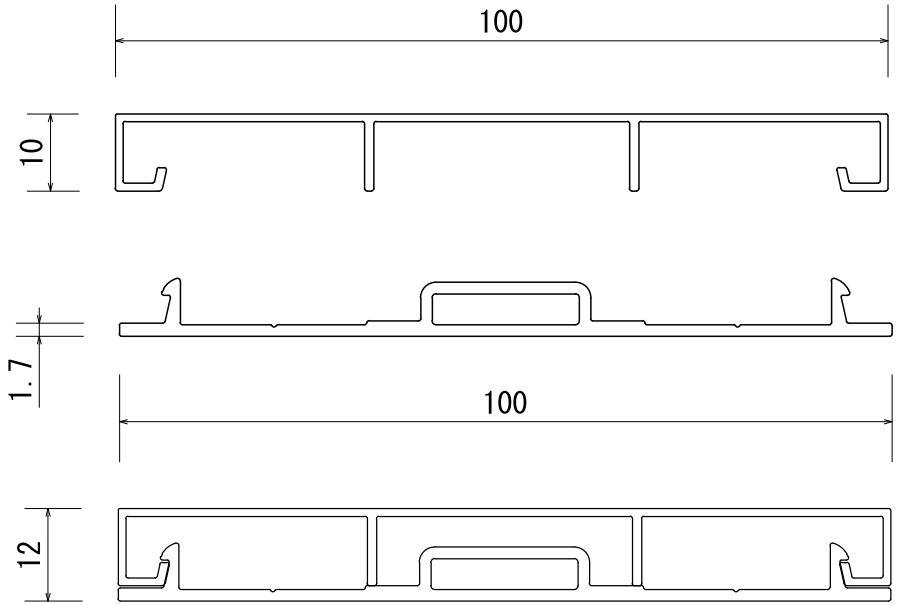

Endcap detail

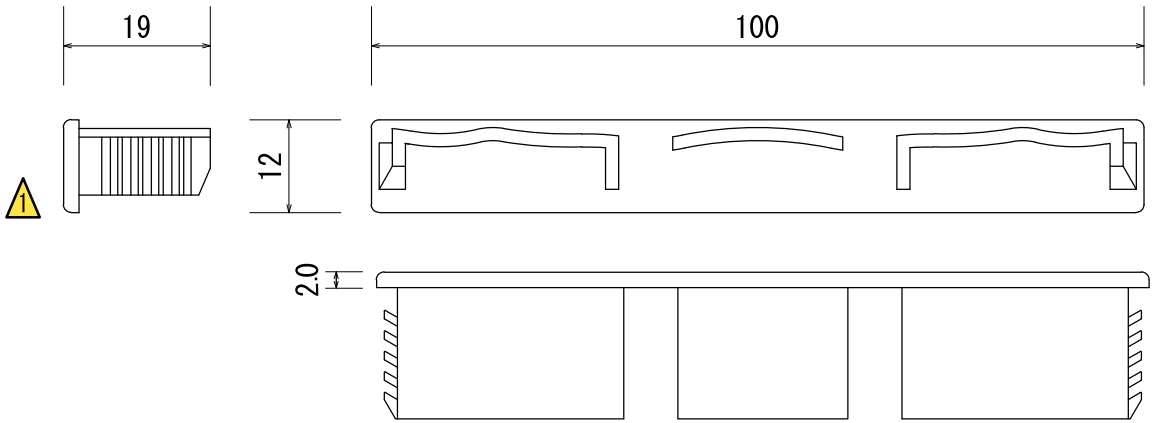

Installation detail 2

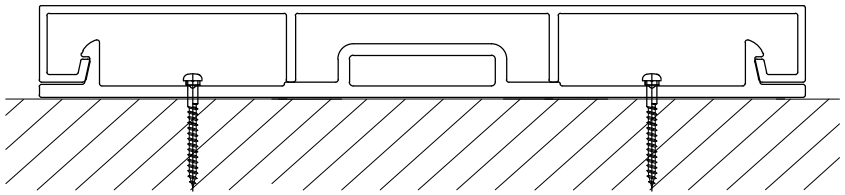

Not to scale

3			Product Name				Project Name	Creation Date	Page	Scale	Projection
2	Install	Never strike extrusion directly with a hammer or rubber mallet. Use a pine plank between the tool and the extrusion to avoid surface damage or denting.	Ever Art Wood - Kabebari				Plank 100x12		20 of 28	1:1	
1	End caps	Secure to batten with screw or exterior grade adhesive (Sikaflex), OR Screw fix or apply exterior grade adhesive (Sikaflex) to secure cap to batten.	Approval	Chek	Drawing	Design	Customer	Distributor		Manufacturer	
No.	DATE							covet		Takasho	

Drawing Number

Kabebari batten detail

Profile: Nami Plank 100x12mm

Base: 0.692kg/m
Cover: 0.458kg/m
Total: 1.15kg/m
Batten thickness: 1.2mm
End cap thickness: 2.0mm

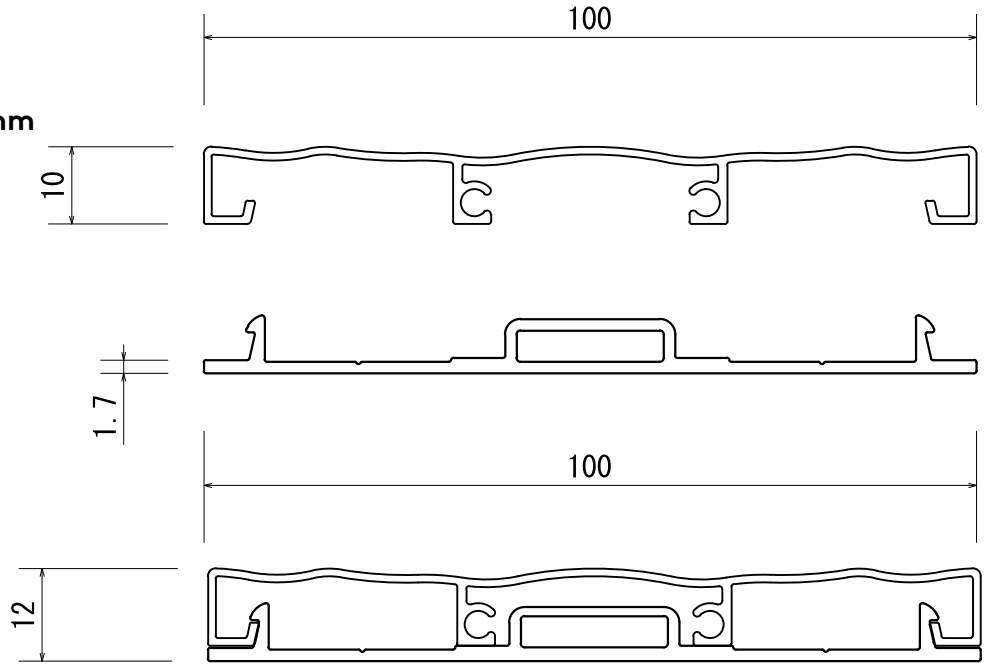

Endcap detail

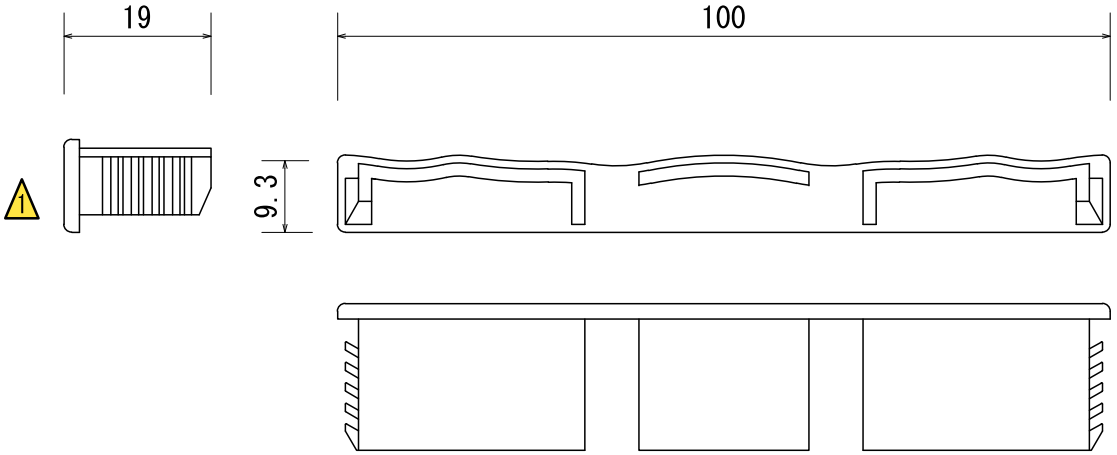

Installation detail 2

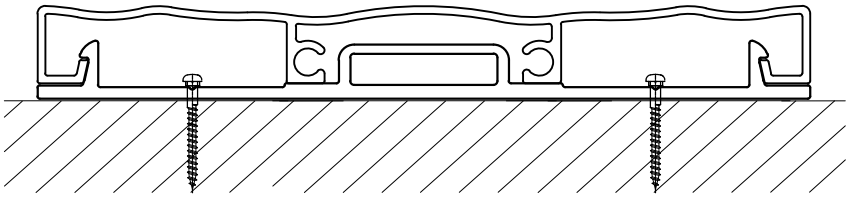

Not to scale

3			Product Name				Project Name	Creation Date	Page	Scale	Projection
2	Install	Never strike extrusion directly with a hammer or rubber mallet. Use a pine plank between the tool and the extrusion to avoid surface damage or denting.	Ever Art Wood - Kabebari				Nami Plank 100x12		21 of 28	1:1	
1	End caps	Secure to batten with screw or exterior grade adhesive (Sikaflex), OR Screw fix or apply exterior grade adhesive (Sikaflex) to secure cap to batten.	Approval	Chek	Drawing	Design	Customer	Distributor	Manufacturer		
No.	DATE							covet	Takasho		

Drawing Number

Kabebari batten detail

Profile: Curve 30x18

Base: 0.108kg/m
Cover: 0.194kg/m
Total: 0.302kg/m
*End cover: 0.203kg/m
Batten thickness: 1.0mm
End cap thickness: 2.5mm

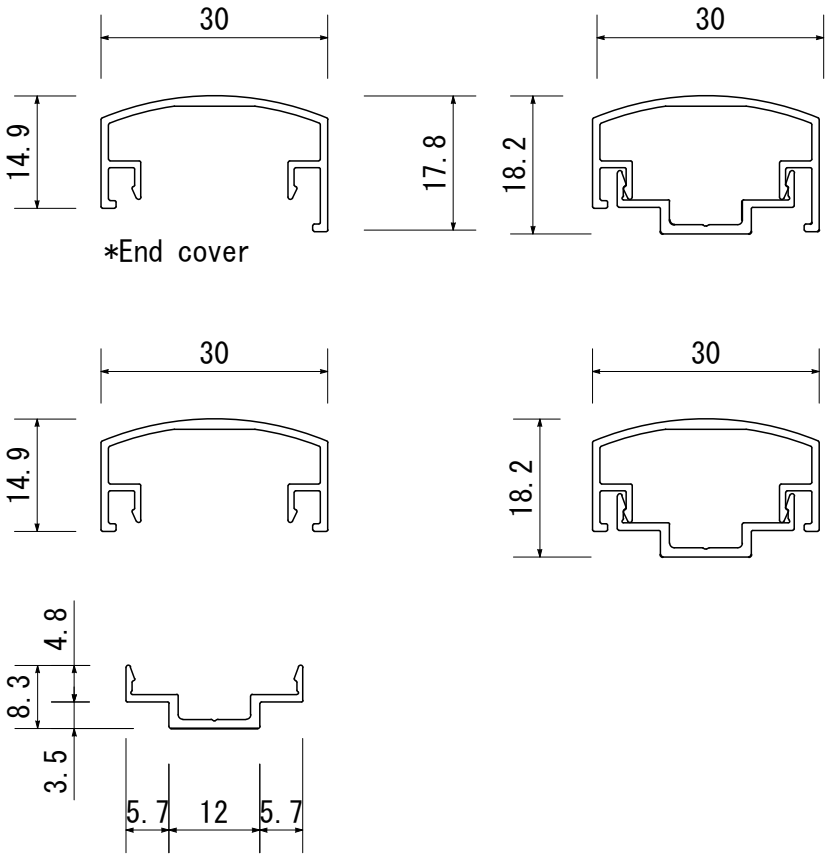

Endcap detail

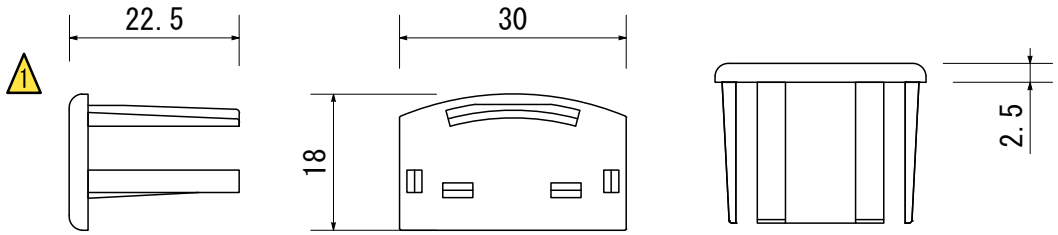

Installation detail 2

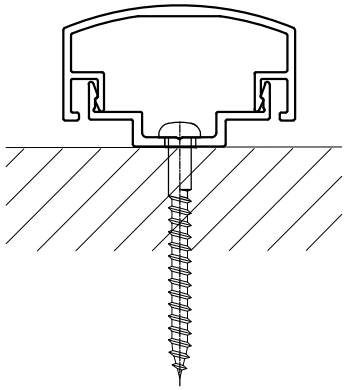

3			Product Name				Project Name	Creation Date	Page	Scale	Projection
2	Install	Never strike extrusion directly with a hammer or rubber mallet. Use a pine plank between the tool and the extrusion to avoid surface damage or denting.	Ever Art Wood - Kabebari				Curve 30x18		22 of 28	1:1	
1	End caps	Secure to batten with screw or exterior grade adhesive (Sikaflex), OR Screw fix or apply exterior grade adhesive (Sikaflex) to secure cap to batten.	Approval	Chek	Drawing	Design	Customer	Distributor		Manufacturer	
No.	DATE							covet		Takasho	

Drawing Number

Kabebari batten detail

Profile: Round Single 22x18mm

Base: 0.084kg/m
Cover: 0.15kg/m
Total: 0.234kg/m
*End cover: 0.167kg/m
Batten thickness: 1.0mm
End cap thickness: 2.5mm

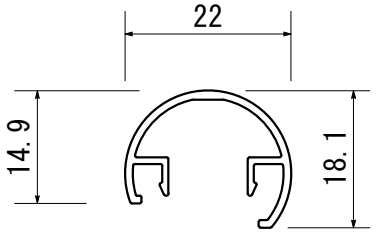

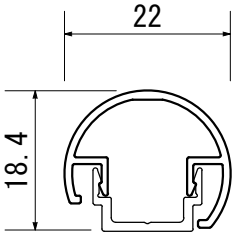

*End cover

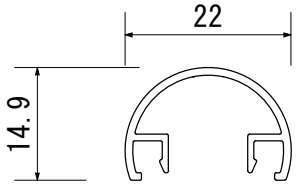

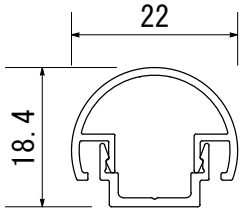

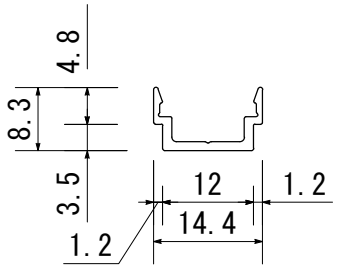

Endcap detail

1

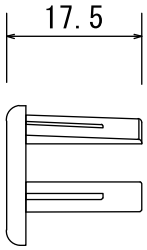

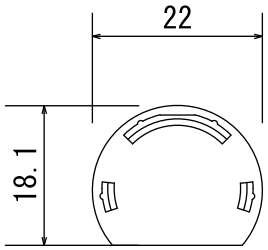

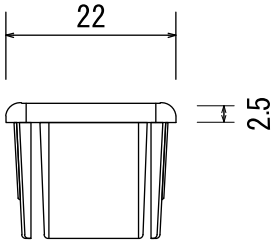

Installation detail 2

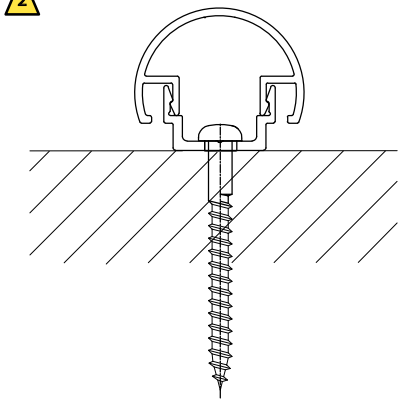

3			Product Name				Project Name	Creation Date	Page	Scale	Projection
2	Install	Never strike extrusion directly with a hammer or rubber mallet. Use a pine plank between the tool and the extrusion to avoid surface damage or denting.	Ever Art Wood - Kabebari				Round Single 22x18		23 of 28	1:1	
1	End caps	Secure to batten with screw or exterior grade adhesive (Sikaflex), OR Screw fix or apply exterior grade adhesive (Sikaflex) to secure cap to batten.	Approval	Chek	Drawing	Design	Customer	Distributor		Manufacturer	
No.	DATE							covet		Takasho	

Drawing Number

Kabebari batten detail

Profile: Round Double 44.5x18mm

Base: 0.166kg/m
Cover: 0.15kg/m x2
Total: 0.466kg/m
*End cover: 0.167kg/m
Batten thickness: 1.0mm
End cap thickness: 2.6mm

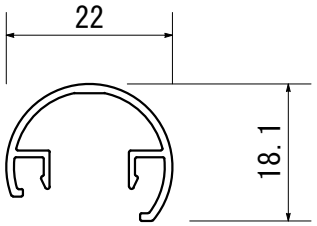

*End cover

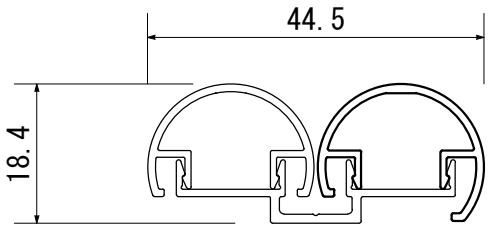

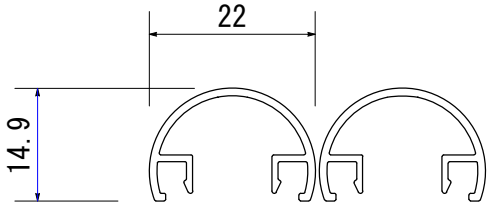

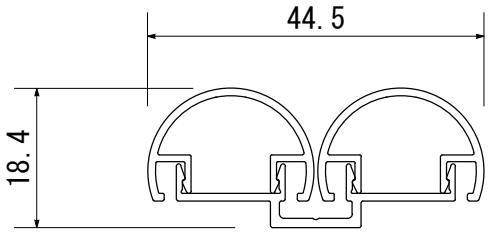

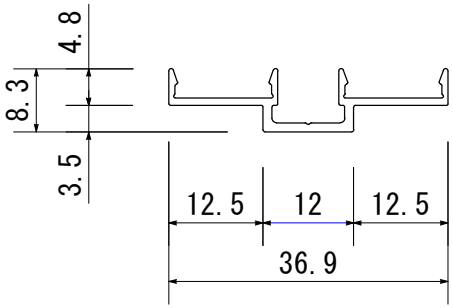

Installation detail 2

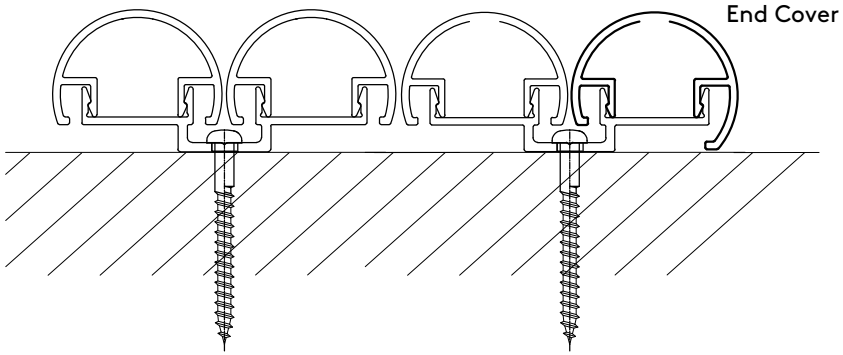

Endcap detail

1

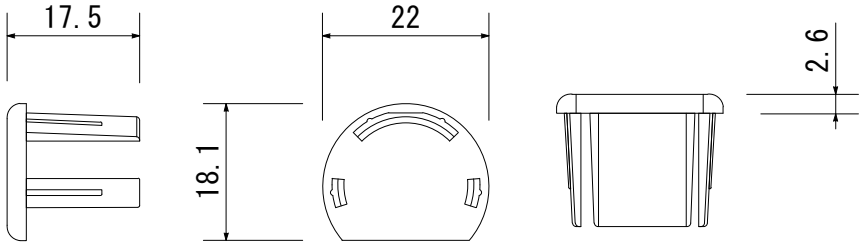

3			Product Name				Project Name	Creation Date	Page	Scale	Projection
2	Install	Never strike extrusion directly with a hammer or rubber mallet. Use a pine plank between the tool and the extrusion to avoid surface damage or denting.	Ever Art Wood - Kabebari				Round Double 44.5x18		24 of 28	1:1	
1	End caps	Secure to batten with screw or exterior grade adhesive (Sikaflex), OR Screw fix or apply exterior grade adhesive (Sikaflex) to secure cap to batten.	Approval	Chek	Drawing	Design	Customer	Distributor		Manufacturer	
No.	DATE							covet		Takasho	

Drawing Number

Kabebari batten detail

Profile: Mikadzuki 44x18mm

Base: 0.166kg/m
Cover: 0.202kg/m
Total: 0.368kg/m
*End cover: 0.213kg/m
Batten thickness: 1.0mm
End cap thickness: 2.5mm

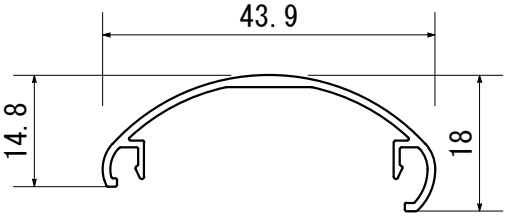

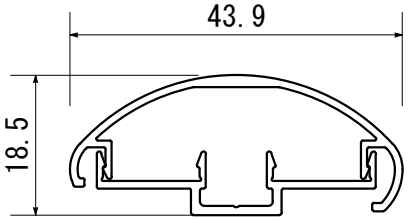

*End cover

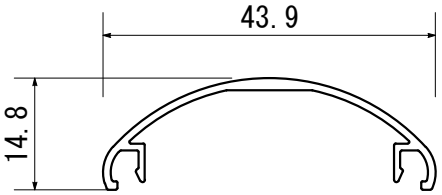

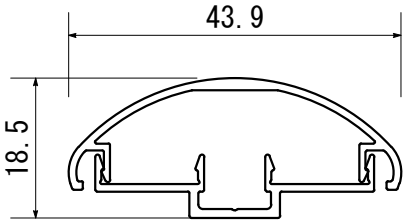

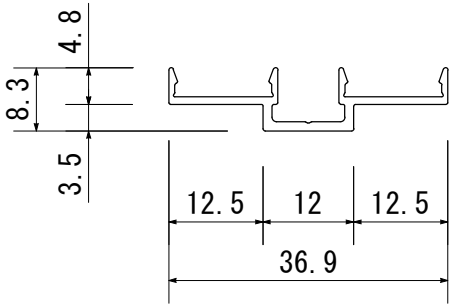

Installation detail 2

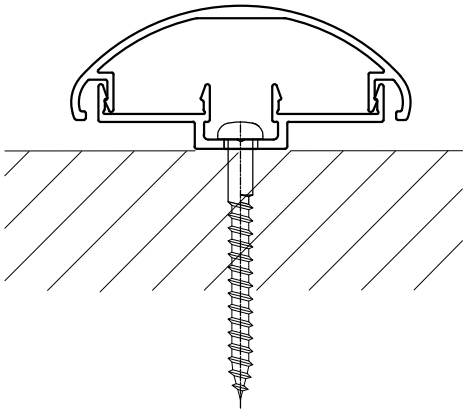

Endcap detail

1

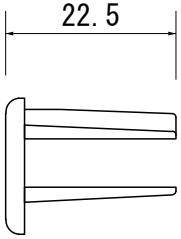

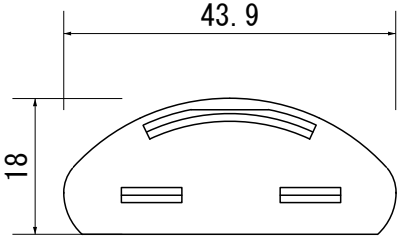

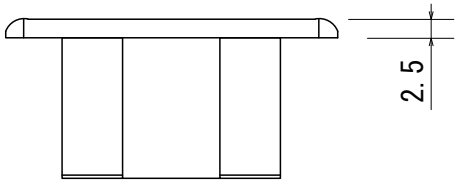

3		
2	Install	Never strike extrusion directly with a hammer or rubber mallet. Use a pine plank between the tool and the extrusion to avoid surface damage or denting.
1	End caps	Secure to batten with screw or exterior grade adhesive (Sikaflex), OR Screw fix or apply exterior grade adhesive (Sikaflex) to secure cap to batten.
No.	DATE	

Product Name	Project Name	Creation Date	Page	Scale	Projection
Ever Art Wood - Kabebari	Mikadsuki 44x18		25 of 28	1:1	

Approval	Chek	Drawing	Design	Customer	Distributor	Manufacturer
					covet	Takasho

Drawing Number

Kabebari batten detail

Profile: Domu 90x42

Base: 0.576kg/m
Cover: 0.802kg/m
Total: 1.378kg/m
Batten thickness: 1.3mm
End cap thickness: 3.5mm

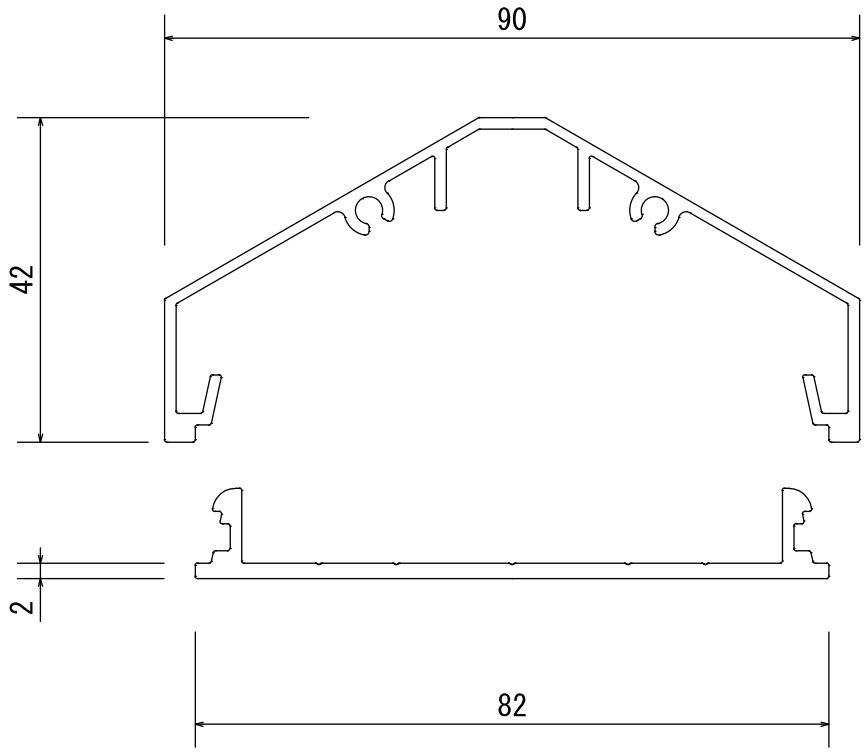

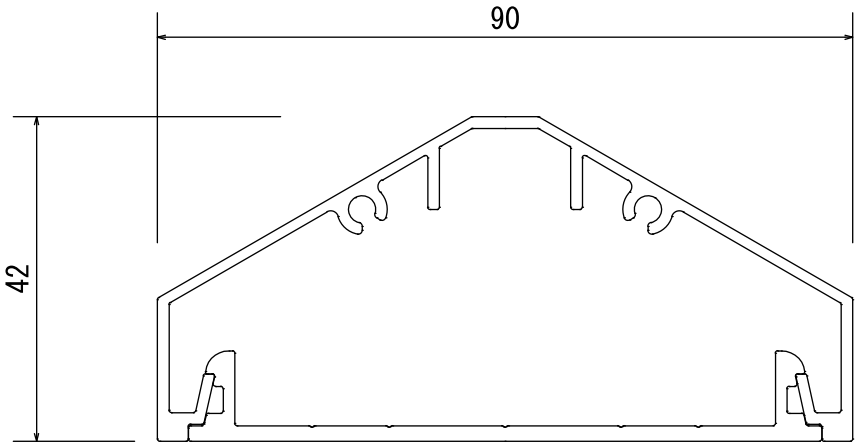

3		
2	Install	Never strike extrusion directly with a hammer or rubber mallet. Use a pine plank between the tool and the extrusion to avoid surface damage or denting.
1	End caps	Secure to batten with screw or exterior grade adhesive (Sikaflex), OR Screw fix or apply exterior grade adhesive (Sikaflex) to secure cap to batten.
No.	DATE	

Product Name	Project Name	Creation Date	Page	Scale	Projection
Ever Art Wood - Kabebari	Domu 90x42		26 of 28	1:1	

Approval	Chek	Drawing	Design	Customer	Distributor	Manufacturer
					covet	Takasho

Drawing Number

Kabebari batten detail

Profile: Domu 90x42

Endcap detail ⚠1

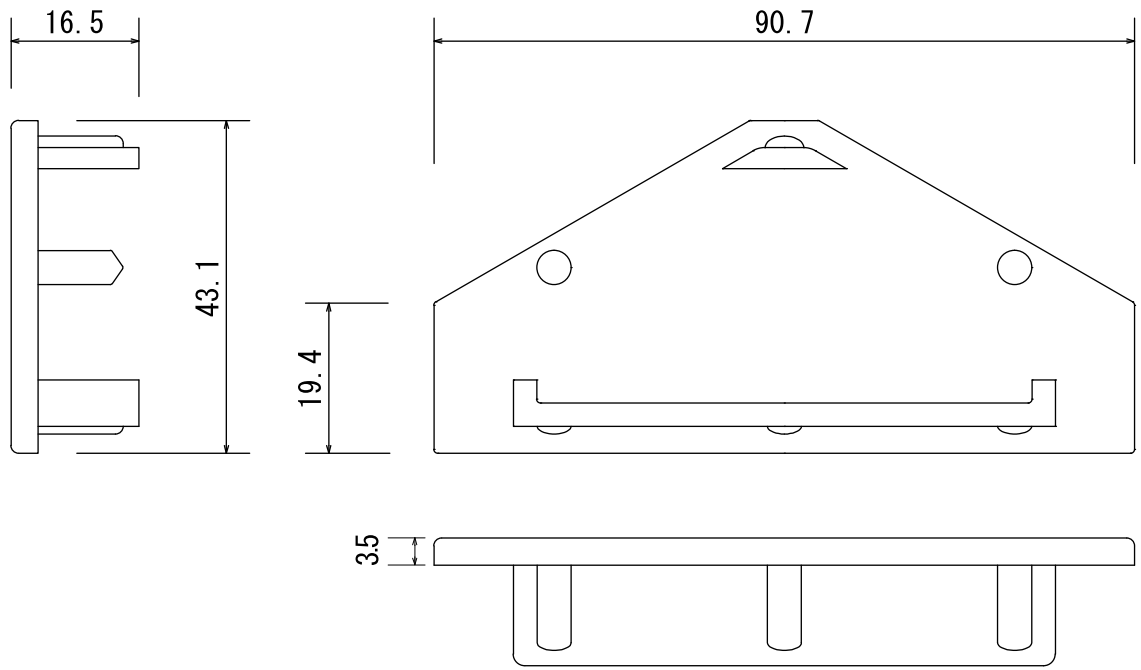

⚠3			Product Name				Project Name	Creation Date	Page	Scale	Projection
⚠2	Install	Never strike extrusion directly with a hammer or rubber mallet. Use a pine plank between the tool and the extrusion to avoid surface damage or denting.	Ever Art Wood - Kabebari				Domu 90x42		27 of 28	1:1	
⚠1	End caps	Secure to batten with screw or exterior grade adhesive (Sikaflex), OR Screw fix or apply exterior grade adhesive (Sikaflex) to secure cap to batten.	Approval	Chek	Drawing	Design	Customer	Distributor		Manufacturer	
No.	DATE							covet		Takasho	

Drawing Number

Kabebari batten detail

Profile: Domu 90x42

Installation detail 2

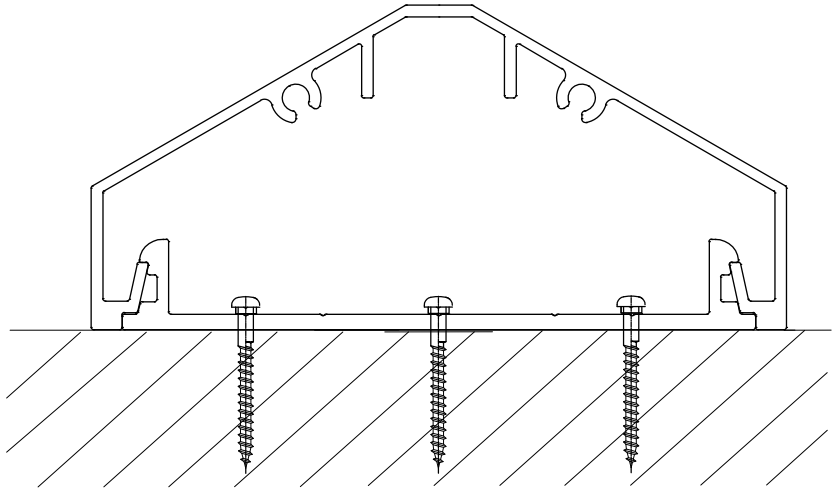

Kabebari Batten Installation Guide

- Aluminium can be damaged if mishandled. Never strike directly with a hammer or rubber mallet. Use a pine plank between the striking rubber mallet and the extrusion to avoid surface damage or denting.
- Cut aluminium with a drop saw using an aluminium blade.
- Always cap ends of extrusions with supplied end caps or a flashing to avoid moisture ingress.
- Plastic end caps must be securely inserted with screws supplied or sikafelx applied to the inside of the extrusion before inserting. This will prevent slippage of the extrusion.
- Metal end caps (painted) must be screwed to the extrusion.
- All end caps can only be applied to straight 90 degree cuts. They cannot be applied to angle end cuts.
- Ensure appropriate screws are used to suit the substrate you are fastening to. It is important to use stainless steel or bi-metal screws for all metal surfaces impacted when fastening (i.e. furring channels, top hats, steel frames). This will prevent galvanic reaction between the screw/substrate and aluminium extrusion.
- Fasten at maximum 1 metre spans. Please contact Covet for further information.
- Always fasten the male (base) section first. The female (top section) clips over the top. They can also slide on if necessary.

3			Product Name				Project Name	Creation Date	Page	Scale	Projection
2	Install	Never strike extrusion directly with a hammer or rubber mallet. Use a pine plank between the tool and the extrusion to avoid surface damage or denting.	Ever Art Wood - Kabebari				Domu 90x42		28 of 28	1:1	
1	End caps	Secure to batten with screw or exterior grade adhesive (Sikaflex), OR Screw fix or apply exterior grade adhesive (Sikaflex) to secure cap to batten.	Approval	Chek	Drawing	Design	Customer	Distributor		Manufacturer	
No.	DATE							covet		Takasho	